PHILIPS

TrueSlim

RC710Bi

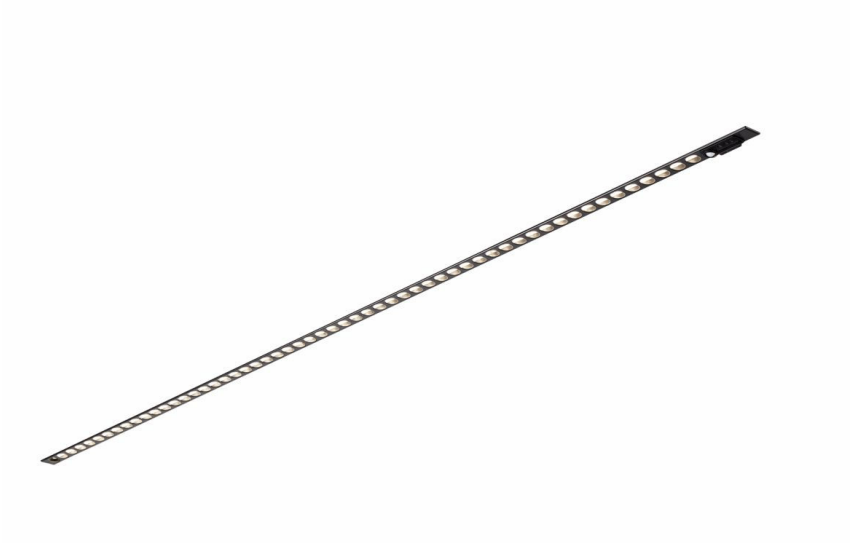

TrueSlim: True sustainable slim LED luminaire for special ceiling

Architects need a lighting solution that matches the interior architecture of the space they are enhancing. TrueSlim is an offering that meets the flexibility requirements for ceiling integration, suitable for a InterAlu & Haufe ceiling types. Specifiers & ceiling integrators need luminaires that save energy, at the same time as providing the right level of light to fit into a specific ceiling dimension. Not only is it compliant with the WELL Building Standard for Light, TrueSlim is rated UGR<19, which is compliant with all office norms (OC). These luminaires in the family are available in different lengths and light outputs. This offers the ultimate design flexibility and unlimited possibilities. TrueSlim luminaires are also a sustainable, with efficiency up to 110 lm/W, lifetime of L90 at 50K hrs and the option to upgrade to wireless connectivity and control.

Benefits

- Office compliant lighting
- Future-ready, scalable smart office capabilities
- Compatible with the Interact connected lighting system
- Supports sustainable building design and energy-saving subsidy criteria

Applications

- Offices
- Education
- Hospitality

Features

- Uniform lighting with excellent glare control (UGR<19, L65<3000cd/m2)
- Luminaire is specially designed for use in linear lamella ceilings

- 3000K & 4000K in CRI>80
- Long lifetime L90@50,000 hours
- Stand-alone driver with default 5m cable. DALI version: 2 luminaires with 1 driver; Interact sensor version: 1 luminaire with 1 driver.
- Luminaire is hanging on the lamella with spring clips for easy installation.
- Integrated sensors/wireless drivers for data collection, occupancy, daylight regulation and wayfinding
- Environmental Product Declaration (EPD)
- The product is IP20 and, as such, is not protected against water ingress. Therefore, we strongly recommend that the environment in which the luminaire is to be installed is suitably checked.
- If the above advice is not taken and the luminaires are subject to water ingress, Philips / Signify cannot guarantee safe failure and the product warranty will become void.

Versions

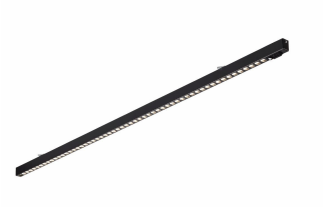

TrueSlim RC710B L120



TrueSlim RC710B L60 PSED



TrueSlim RC710B L60 SENSOR



TrueSlim RC710B 2XL120 PSED



TrueSlim RC710B 2XL60 PSED



TrueSlim RC710B EL VERSION

Dimensional drawing

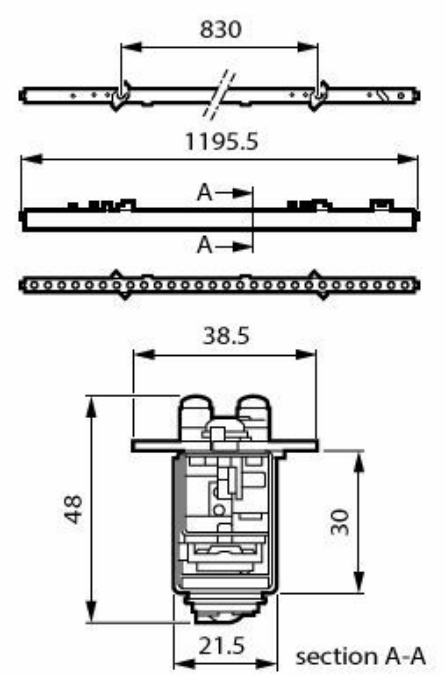

RC710B 34S/840 SEIA IA4 W3 L120 BK

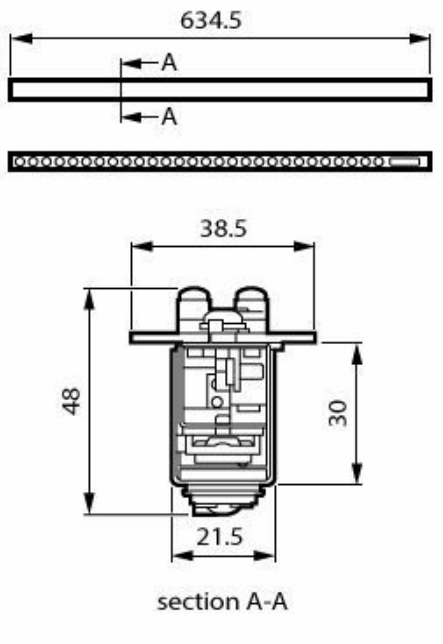

RC710B 17S/830 SEIA IA4 W3 L60 BK

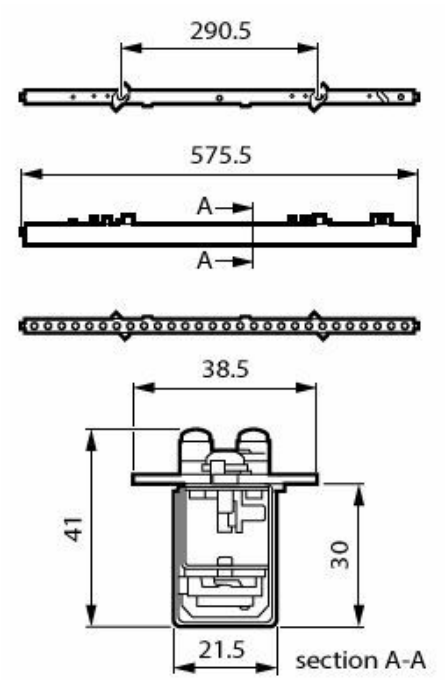

RC710B 17S/840 PSED W5 L60 BK

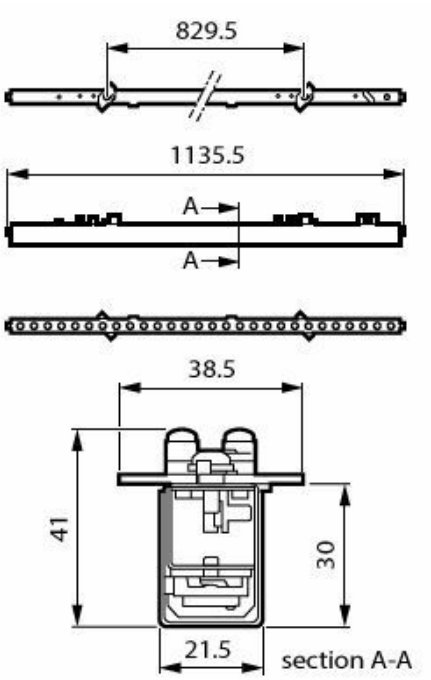

RC710B 2X34S/830 PSED W5 L120 BK

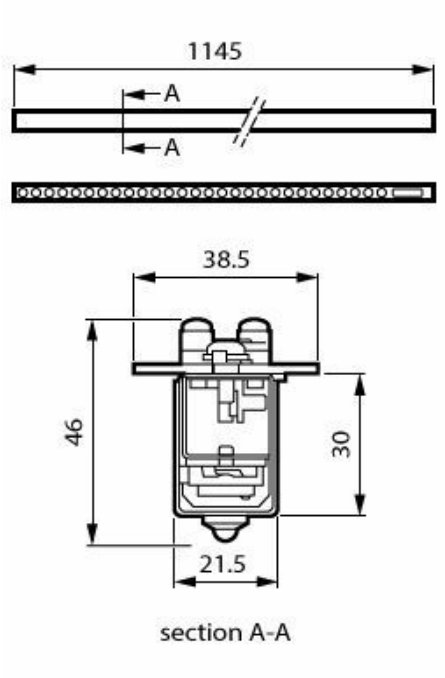

RC710B 34S/840 PSD ELP3 W5 L120 BK

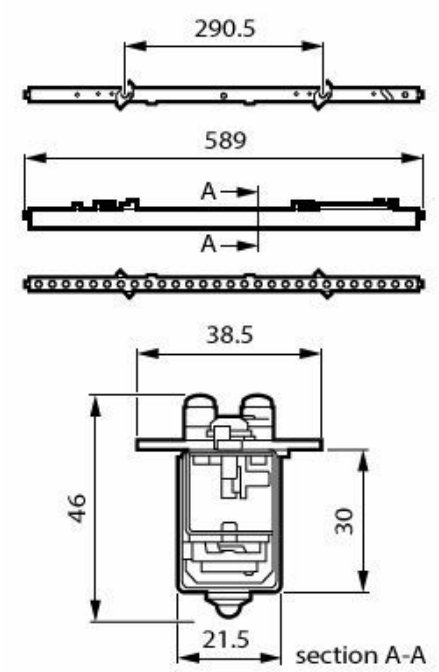

RC710B 17S/840 PSD ELP3 W5 L60 BK

Product details



TrueSlim RC710B 2xL60 COLLAGE



TrueSlim RC710B 1xL60 COLLAGE



TrueSlim RC710B EL COLLAGE

General Information

Number of gear units	1 unit
Driver included	Yes
Service tag	Yes

Light Technical

Color rendering index (CRI)	>80
Optic type	Very wide beam

Operating and Electrical

Input Voltage	220 to 240 V
Line Frequency	50 to 60 Hz
Suitable for random switching	Yes
Protection class IEC	Safety class II

Controls and Dimming

Dimmable	Yes
Maximum dim level	1%
Embedded control	Interact SNS210 sensor

Mechanical and Housing

Housing Color	Black
Ingress protection code	IP20 [Finger-protected]
Mech. impact protection code	IK03 [0.3 J]
Explosion hazard class	-

Emergency Operation

Emergency flux	300 lm
Power consumption during Central DC emergency mode	4 W
Rated duration of the emergency lighting (when fully charged)	3 hour(s)
Type of emergency lighting battery	Lithium

Approval and Application

Glow-wire test	Temperature 650 °C, duration 30 s
Flammability mark	For mounting on normally flammable surfaces
CE mark	Yes
ENEC mark	ENEC mark
Ambient temperature range	0 to +35 °C

Initial Performance (IEC Compliant)

Luminous flux tolerance	+/-10%

Product Data

Product family code	RC710B [TrueSlim]

Light Technical

Order Code	Full Product Name	Luminous Flux	Correlated Color Temperature (Nom)	Luminous Efficacy (rated) (Nom)
910505105755	RC710B 34S/830 PSED W5 L120 BK	3,400 lm	3000 K	113 lm/W
910505105758	RC710B 34S/830 SEIA IA4 W3 L120 BK	3,400 lm	3000 K	110 lm/W
910505105761	RC710B 34S/840 PSED W5 L120 BK	3,400 lm	4000 K	113 lm/W
910505105766	RC710B 34S/840 SEIA IA4 W3 L120 BK	3,400 lm	4000 K	110 lm/W
910505105753	RC710B 17S/830 PSED W5 L60 BK	1,700 lm	3000 K	113 lm/W
910505105759	RC710B 17S/840 PSED W5 L60 BK	1,700 lm	4000 K	113 lm/W
910505105757	RC710B 17S/830 SEIA IA4 W3 L60 BK	1,700 lm	3000 K	113 lm/W
910505105765	RC710B 17S/840 SEIA IA4 W3 L60 BK	1,700 lm	4000 K	113 lm/W
910505105756	RC710B 2X34S/830 PSED W5 L120 BK	3,400 lm	3000 K	111 lm/W
910505105762	RC710B 2X34S/840 PSED W5 L120 BK	3,400 lm	4000 K	111 lm/W
910505105754	RC710B 2X17S/830 PSED W5 L60 BK	1,700 lm	3000 K	113 lm/W
910505105760	RC710B 2X17S/840 PSED W5 L60 BK	1,700 lm	4000 K	113 lm/W
910505105763	RC710B 17S/840 PSD ELP3 W5 L60 BK	1,700 lm	4000 K	89 lm/W
910505105764	RC710B 34S/840 PSD ELP3 W5 L120 BK	3,400 lm	4000 K	100 lm/W

Operating and Electrical

Order Code	Full Product Name	Power Consumption
910505105755	RC710B 34S/830 PSED W5 L120 BK	30 W
910505105758	RC710B 34S/830 SEIA IA4 W3 L120 BK	30 W
910505105761	RC710B 34S/840 PSED W5 L120 BK	30 W
910505105766	RC710B 34S/840 SEIA IA4 W3 L120 BK	31 W
910505105753	RC710B 17S/830 PSED W5 L60 BK	15 W
910505105759	RC710B 17S/840 PSED W5 L60 BK	15 W
910505105757	RC710B 17S/830 SEIA IA4 W3 L60 BK	15 W
910505105765	RC710B 17S/840 SEIA IA4 W3 L60 BK	15 W
910505105756	RC710B 2X34S/830 PSED W5 L120 BK	61 W
910505105762	RC710B 2X34S/840 PSED W5 L120 BK	61 W
910505105754	RC710B 2X17S/830 PSED W5 L60 BK	30 W
910505105760	RC710B 2X17S/840 PSED W5 L60 BK	30 W
910505105763	RC710B 17S/840 PSD ELP3 W5 L60 BK	19 W
910505105764	RC710B 34S/840 PSD ELP3 W5 L120 BK	30 W

Emergency Operation

Order Code	Full Product Name	Central Emergency	Emergency lighting
910505105755	RC710B 34S/830 PSED W5 L120 BK	Yes	DC operated central emergency lighting
910505105758	RC710B 34S/830 SEIA IA4 W3 L120 BK	Yes	DC operated central emergency lighting
910505105761	RC710B 34S/840 PSED W5 L120 BK	Yes	DC operated central emergency lighting
910505105766	RC710B 34S/840 SEIA IA4 W3 L120 BK	Yes	DC operated central emergency lighting
910505105753	RC710B 17S/830 PSED W5 L60 BK	Yes	DC operated central emergency lighting

Order Code	Full Product Name	Central Emergency	Emergency lighting
910505105759	RC710B 17S/840 PSED W5 L60 BK	Yes	DC operated central emergency lighting
910505105757	RC710B 17S/830 SEIA IA4 W3 L60 BK	Yes	DC operated central emergency lighting
910505105765	RC710B 17S/840 SEIA IA4 W3 L60 BK	Yes	DC operated central emergency lighting
910505105756	RC710B 2X34S/830 PSED W5 L120 BK	Yes	DC operated central emergency lighting
910505105762	RC710B 2X34S/840 PSED W5 L120 BK	Yes	DC operated central emergency lighting
910505105754	RC710B 2X17S/830 PSED W5 L60 BK	Yes	DC operated central emergency lighting
910505105760	RC710B 2X17S/840 PSED W5 L60 BK	Yes	DC operated central emergency lighting
910505105763	RC710B 17S/840 PSD ELP3 W5 L60 BK	No	Emergency lighting 3 hours duration Pro version
910505105764	RC710B 34S/840 PSD ELP3 W5 L120 BK	No	Emergency lighting 3 hours duration Pro version

Initial Performance (IEC Compliant)

Order Code	Full Product Name	Initial chromaticity
910505105755	RC710B 34S/830 PSED W5 L120 BK	(0.43, 0.40) SDCM <3
910505105758	RC710B 34S/830 SEIA IA4 W3 L120 BK	(0.43, 0.40) SDCM <3
910505105761	RC710B 34S/840 PSED W5 L120 BK	(0.38, 0.38) SDCM <3
910505105766	RC710B 34S/840 SEIA IA4 W3 L120 BK	(0.38, 0.38) SDCM <3
910505105753	RC710B 17S/830 PSED W5 L60 BK	(0.43, 0.40) SDCM <3
910505105759	RC710B 17S/840 PSED W5 L60 BK	(0.38, 0.38) SDCM <3
910505105757	RC710B 17S/830 SEIA IA4 W3 L60 BK	(0.43, 0.40) SDCM <3
910505105765	RC710B 17S/840 SEIA IA4 W3 L60 BK	(0.38, 0.38) SDCM <3
910505105756	RC710B 2X34S/830 PSED W5 L120 BK	(0.43, 0.40) SDCM <3
910505105762	RC710B 2X34S/840 PSED W5 L120 BK	(0.38, 0.38) SDCM <3
910505105754	RC710B 2X17S/830 PSED W5 L60 BK	(0.43, 0.40) SDCM <3
910505105760	RC710B 2X17S/840 PSED W5 L60 BK	(0.38, 0.38) SDCM <3
910505105763	RC710B 17S/840 PSD ELP3 W5 L60 BK	(0.38, 0.38) SDCM <3
910505105764	RC710B 34S/840 PSD ELP3 W5 L120 BK	(0.38, 0.38) SDCM <3

© 2026 Signify Holding. All rights reserved. The information provided herein is subject to change, without notice. Signify does not give any representation or warranty as to the accuracy or completeness of the information included herein and shall not be liable for any action in reliance thereon. The information presented in this document is not intended as any commercial offer and does not form part of any quotation or contract, unless otherwise agreed by Signify. Philips and the Philips Shield Emblem are registered trademarks of Koninklijke Philips N.V.