PHILIPS

HID-High Power ballasts for SON/MH lamps

DHPSON



Product Description

Impregnated (HID standard) electromagnetic ballasts, of copper/iron construction, for use in combination with an external ignitor, for HID lamps

Benefits

- Limited ballast coil volume and reduced weight, with minimum watt losses
- Simple installation and cabling

Applications

- For application with SON/MHN-LA lamps, which are used in road lighting, public lighting, industry lighting
- HID basic ballasts should be restricted to built-in situations where relative humid is limited

Features

- Orthocyclic winding process
- Ballasts standard equipped with screw terminal blocks
- Earthing while-mounting facility (HID Standard ballasts)

Versions



GPPR HPSON

Dimensional drawing

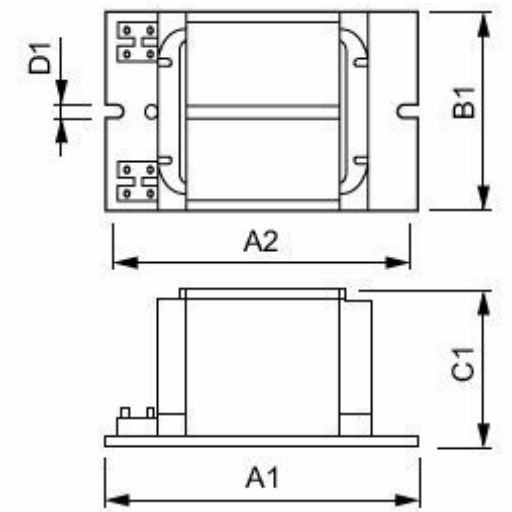

Product	D1	C1	A1	A2	B1
BSN 1000L 302I	7 mm	102.0 mm	183 mm	134.5 mm	117.0 mm

Operating and Electrical

Input Voltage	230 V
Line Frequency	50 Hz
Input Frequency	50 Hz

© 2026 Signify Holding. All rights reserved. The information provided herein is subject to change, without notice. Signify does not give any representation or warranty as to the accuracy or completeness of the information included herein and shall not be liable for any action in reliance thereon. The information presented in this document is not intended as any commercial offer and does not form part of any quotation or contract, unless otherwise agreed by Signify. Philips and the Philips Shield Emblem are registered trademarks of Koninklijke Philips N.V.