PHILIPS

Latam Downlight

8852834



An ideal solution for installers and customers who wish easy intallation, visual comfort and excellent quality

Latam Downlight offers excellent experience for the consumer, which includs eye comfort, reliable quality and outstanding performance. Also provide water proof and dip switch solutioins within this family. Providing integrated or seprate driver and plenty CCT choices.

Benefits

- Comfortable LED light that's easy on eyes
- Long lifetime
- Reliable & Outstanding Performance

Features

- EyeComfort
- Safe to use & Reliable Quality
- High lumen output

Applications

- Retail
- Offices
- Hospitality

Versions



DL252-RD-Surface-Mount-20241125

DL252-SQ-Recessed-20241125



SL052 RD SPOT WH MV 20240702

DL252-RD-Recessed-20241125



DL252-SQ-Surface-Mount-20241125



SL052 SQ SPOT WH MV 20240705

Dimensional drawing

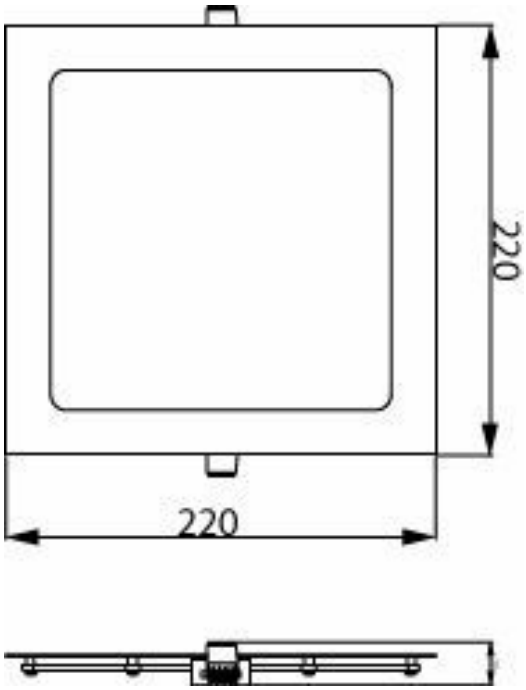

DL252 G2 R SQ 1300 65K 18W 8" EMC

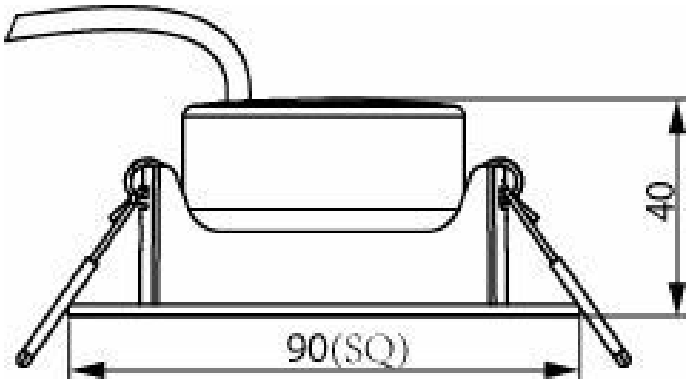

SL052 SQ SPOT 070 6.2W 27K WH WV

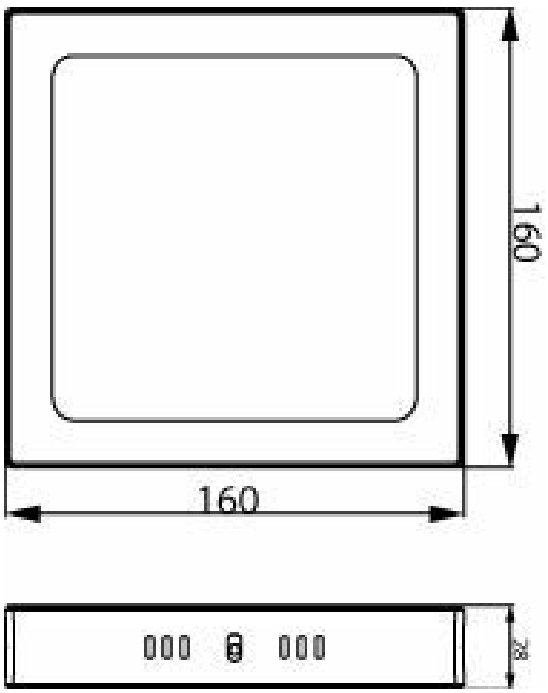

DL252 G2 SF SQ 900 65K 12W 6" EMC

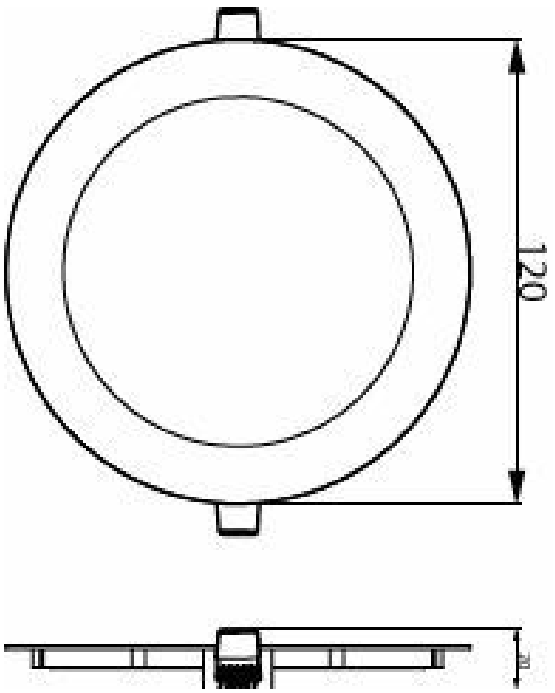

DL252 G2 R Rd 400 40K 6W 4" EMC

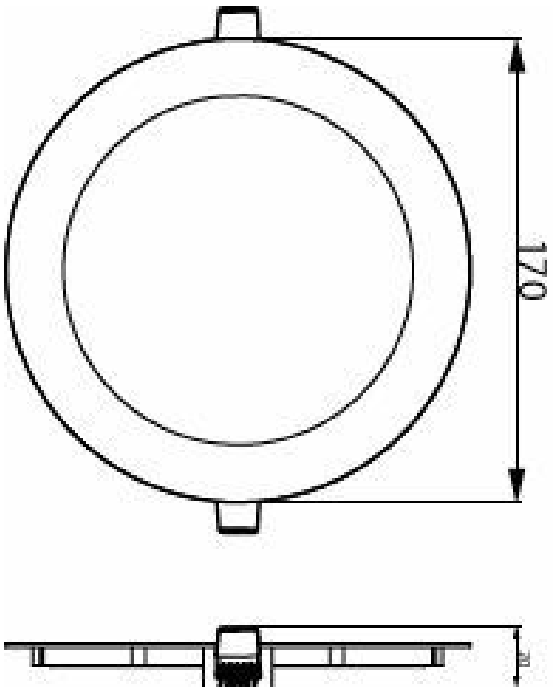

DL252 G2 R Rd 900 40K 12W 6" EMC

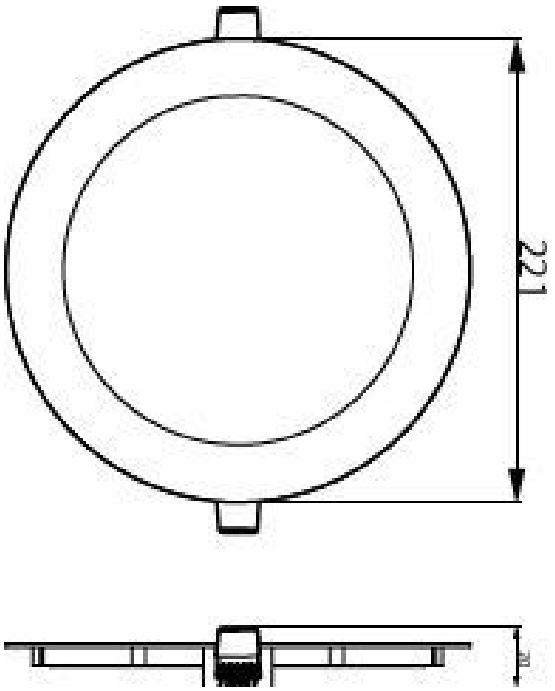

DL252 G2 R Rd 1300 30K 18W 8" EMC

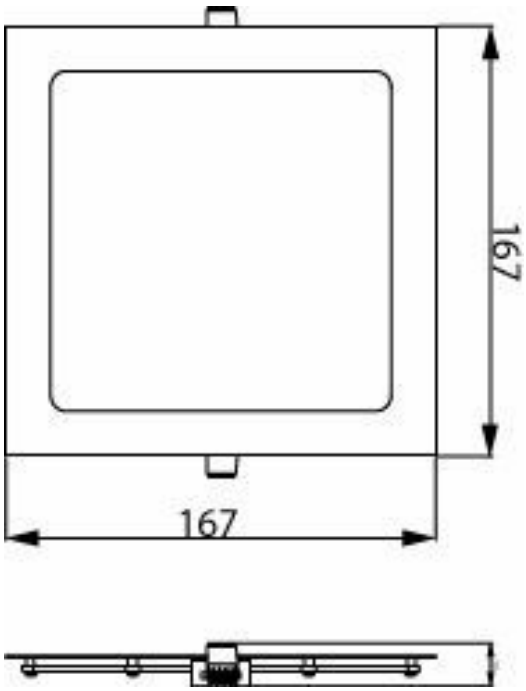

DL252 G2 R SQ 900 30K 12W 6" EMC

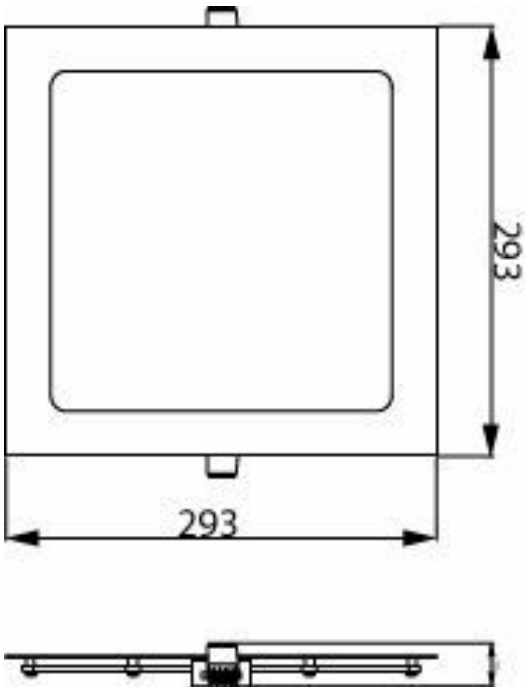

DL252 G2 R SQ 2000 65K 24W 11" EMC

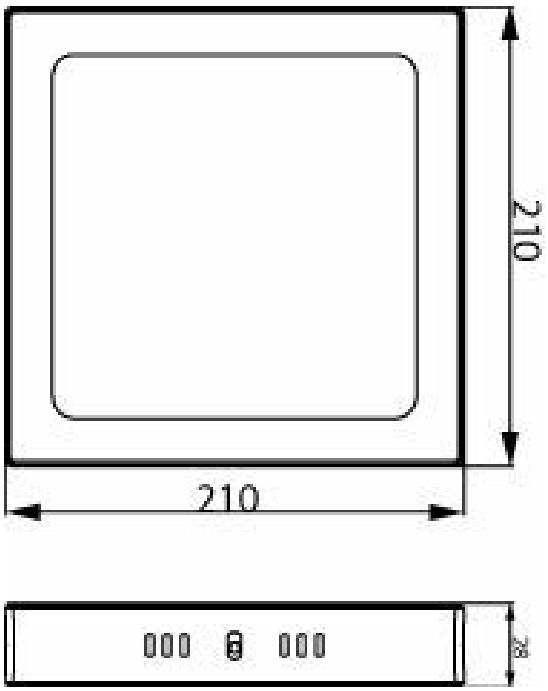

DL252 G2 SF SQ 1300 65K 18W 8" EMC

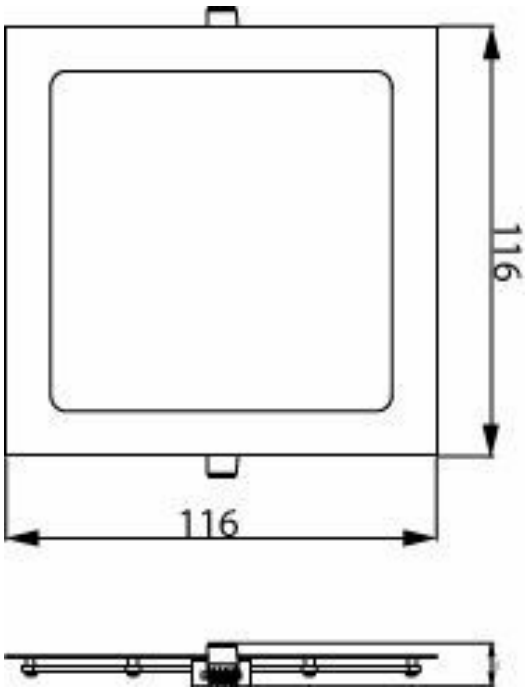

DL252 G2 R SQ 400 65K 6W 4" EMC

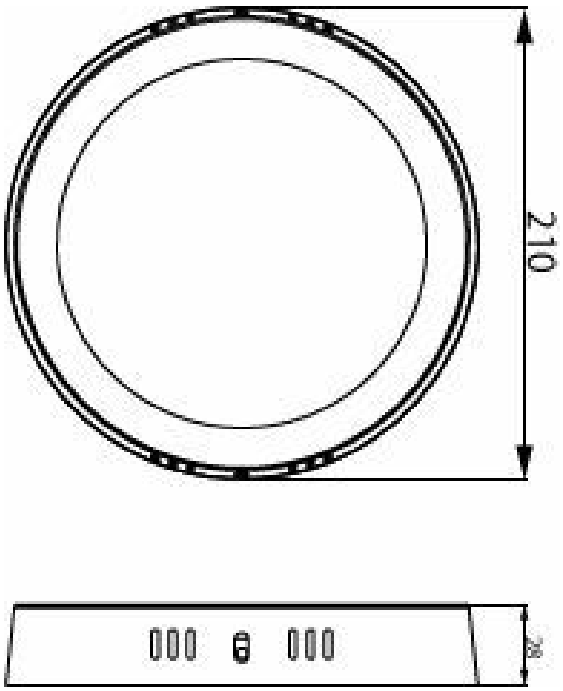

DL252 G2 SF RD 1300 65K 18W 8" EMC

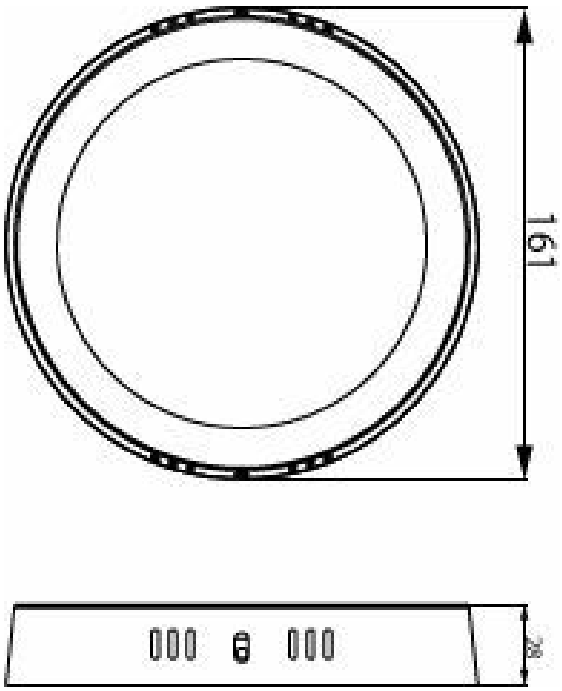

DL252 G2 SF RD 900 65K 12W 6" EMC

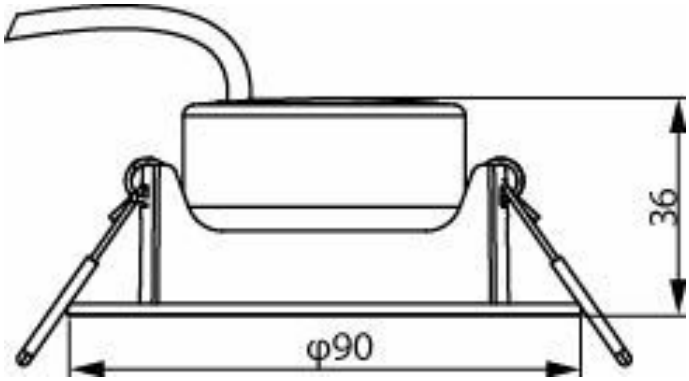

SL052 RD SPOT 070 6.2W 27K WH WV

General Information

Light source replaceable	No
Number of gear units	1 unit
Driver included	Yes

Light Technical

Color rendering index (CRI)	80
Number of light sources	1

Operating and Electrical

Input Voltage	110 to 240 V
Line Frequency	50 or 60 Hz
Suitable for random switching	No
Protection class IEC	Safety class II

Controls and Dimming

Dimmable	No

Mechanical and Housing

Housing Color	White
Ingress protection code	IP20 [Finger-protected]

Approval and Application

Glow-wire test	Temperature 650 °C, duration 30 s
Flammability mark	For mounting on normally flammable surfaces
Ambient temperature range	-20 to +40 °C

Light Technical

Order Code	Full Product Name	Luminous Flux	Correlated Color Temperature (Nom)	Luminous Efficacy (rated) (Nom)	Optic type
929004655001	DL252 G2 SF RD 900 65K 12W 6" EMC	900 lm	6500 K	75 lm/W	Wide beam
929004655201	DL252 G2 SF RD 1300 40K 18W 8" EMC	1,300 lm	4000 K	72 lm/W	Wide beam
929004655301	DL252 G2 SF RD 1300 65K 18W 8" EMC	1,300 lm	6500 K	72 lm/W	Wide beam
929004654101	DL252 G2 R SQ 400 30K 6W 4" EMC	400 lm	3000 K	66 lm/W	Wide beam
929004654201	DL252 G2 R SQ 400 65K 6W 4" EMC	400 lm	6500 K	66 lm/W	Wide beam
929004654301	DL252 G2 R SQ 900 30K 12W 6" EMC	900 lm	3000 K	75 lm/W	Wide beam
929004654401	DL252 G2 R SQ 900 65K 12W 6" EMC	900 lm	6500 K	75 lm/W	Wide beam
929004654601	DL252 G2 R SQ 1300 65K 18W 8" EMC	1,300 lm	6500 K	72 lm/W	Wide beam
929004654701	DL252 G2 R SQ 2000 65K 24W 11" EMC	2,000 lm	6500 K	83 lm/W	Wide beam
929002654801	SL052 RD SPOT 070 4.2W 27K WH WV	350 lm	2700 K	83 lm/W	Narrow beam
929002655001	SL052 RD SPOT 070 4.2W 65K WH WV	380 lm	6500 K	90 lm/W	Narrow beam
929002655401	SL052 RD SPOT 070 6.2W 27K WH WV	500 lm	2700 K	80 lm/W	Narrow beam
929002655601	SL052 RD SPOT 070 6.2W 65K WH WV	550 lm	6500 K	88 lm/W	Narrow beam
929004653201	DL252 G2 R Rd 400 40K 6W 4" EMC	400 lm	4000 K	66 lm/W	Wide beam
929004653501	DL252 G2 R Rd 900 40K 12W 6" EMC	900 lm	4000 K	75 lm/W	Wide beam
929004653701	DL252 G2 R Rd 1300 30K 18W 8" EMC	1,300 lm	3000 K	72 lm/W	Wide beam
929004653801	DL252 G2 R Rd 1300 40K 18W 8" EMC	1,300 lm	4000 K	72 lm/W	Wide beam
929004655501	DL252 G2 SF SQ 900 65K 12W 6" EMC	900 lm	6500 K	75 lm/W	Wide beam
929004655601	DL252 G2 SF SQ 1300 65K 18W 8" EMC	1,300 lm	6500 K	72 lm/W	Wide beam
929002655101	SL052 SQ SPOT 070 4.2W 27K WH WV	350 lm	2700 K	83 lm/W	Narrow beam
929002655301	SL052 SQ SPOT 070 4.2W 65K WH WV	380 lm	6500 K	90 lm/W	Narrow beam
929002655701	SL052 SQ SPOT 070 6.2W 27K WH WV	500 lm	2700 K	80 lm/W	Narrow beam
929002655901	SL052 SQ SPOT 070 6.2W 65K WH WV	550 lm	6500 K	88 lm/W	Narrow beam

Operating and Electrical

Order Code	Full Product Name	Power Consumption
929004655001	DL252 G2 SF RD 900 65K 12W 6" EMC	12 W
929004655201	DL252 G2 SF RD 1300 40K 18W 8" EMC	18 W
929004655301	DL252 G2 SF RD 1300 65K 18W 8" EMC	18 W
929004654101	DL252 G2 R SQ 400 30K 6W 4" EMC	6 W
929004654201	DL252 G2 R SQ 400 65K 6W 4" EMC	6 W
929004654301	DL252 G2 R SQ 900 30K 12W 6" EMC	12 W
929004654401	DL252 G2 R SQ 900 65K 12W 6" EMC	12 W
929004654601	DL252 G2 R SQ 1300 65K 18W 8" EMC	18 W
929004654701	DL252 G2 R SQ 2000 65K 24W 11" EMC	24 W
929002654801	SL052 RD SPOT 070 4.2W 27K WH WV	4.2 W
929002655001	SL052 RD SPOT 070 4.2W 65K WH WV	4.2 W
929002655401	SL052 RD SPOT 070 6.2W 27K WH WV	6.2 W
929002655601	SL052 RD SPOT 070 6.2W 65K WH WV	6.2 W

Order Code	Full Product Name	Power Consumption
929004653201	DL252 G2 R Rd 400 40K 6W 4" EMC	6 W
929004653501	DL252 G2 R Rd 900 40K 12W 6" EMC	12 W
929004653701	DL252 G2 R Rd 1300 30K 18W 8" EMC	18 W
929004653801	DL252 G2 R Rd 1300 40K 18W 8" EMC	18 W
929004655501	DL252 G2 SF SQ 900 65K 12W 6" EMC	12 W
929004655601	DL252 G2 SF SQ 1300 65K 18W 8" EMC	18 W
929002655101	SL052 SQ SPOT 070 4.2W 27K WH WV	4.2 W
929002655301	SL052 SQ SPOT 070 4.2W 65K WH WV	4.2 W
929002655701	SL052 SQ SPOT 070 6.2W 27K WH WV	6.2 W
929002655901	SL052 SQ SPOT 070 6.2W 65K WH WV	6.2 W

Mechanical and Housing

Order Code	Full Product Name	Mech. impact protection code
929004655001	DL252 G2 SF RD 900 65K 12W 6" EMC	IK01
929004655201	DL252 G2 SF RD 1300 40K 18W 8" EMC	IK01
929004655301	DL252 G2 SF RD 1300 65K 18W 8" EMC	IK01
929004654101	DL252 G2 R SQ 400 30K 6W 4" EMC	IK01
929004654201	DL252 G2 R SQ 400 65K 6W 4" EMC	IK01
929004654301	DL252 G2 R SQ 900 30K 12W 6" EMC	IK01
929004654401	DL252 G2 R SQ 900 65K 12W 6" EMC	IK01
929004654601	DL252 G2 R SQ 1300 65K 18W 8" EMC	IK01
929004654701	DL252 G2 R SQ 2000 65K 24W 11" EMC	IK01
929002654801	SL052 RD SPOT 070 4.2W 27K WH WV	IK03
929002655001	SL052 RD SPOT 070 4.2W 65K WH WV	IK03
929002655401	SL052 RD SPOT 070 6.2W 27K WH WV	IK03
929002655601	SL052 RD SPOT 070 6.2W 65K WH WV	IK03
929004653201	DL252 G2 R Rd 400 40K 6W 4" EMC	IK01
929004653501	DL252 G2 R Rd 900 40K 12W 6" EMC	IK01
929004653701	DL252 G2 R Rd 1300 30K 18W 8" EMC	IK01
929004653801	DL252 G2 R Rd 1300 40K 18W 8" EMC	IK01
929004655501	DL252 G2 SF SQ 900 65K 12W 6" EMC	IK01
929004655601	DL252 G2 SF SQ 1300 65K 18W 8" EMC	IK01
929002655101	SL052 SQ SPOT 070 4.2W 27K WH WV	IK03
929002655301	SL052 SQ SPOT 070 4.2W 65K WH WV	IK03
929002655701	SL052 SQ SPOT 070 6.2W 27K WH WV	IK03
929002655901	SL052 SQ SPOT 070 6.2W 65K WH WV	IK03

Initial Performance (IEC Compliant)

Order Code	Full Product Name	Luminous flux tolerance	Initial chromaticity
929004655001	DL252 G2 SF RD 900 65K 12W 6" EMC	+/-10%	(0.313, 0.337) <6SDCM

Order Code	Full Product Name	Luminous flux tolerance	Initial chromaticity
929004655201	DL252 G2 SF RD 1300 40K 18W 8" EMC	+/-10%	(0.380, 0.380) <6SDCM
929004655301	DL252 G2 SF RD 1300 65K 18W 8" EMC	+/-10%	(0.313, 0.337) <6SDCM
929004654101	DL252 G2 R SQ 400 30K 6W 4" EMC	+/-10%	(0.440, 0.403) <6SDCM
929004654201	DL252 G2 R SQ 400 65K 6W 4" EMC	+/-10%	(0.313, 0.337) <6SDCM
929004654301	DL252 G2 R SQ 900 30K 12W 6" EMC	+/-10%	(0.440, 0.403) <6SDCM
929004654401	DL252 G2 R SQ 900 65K 12W 6" EMC	+/-10%	(0.313, 0.337) <6SDCM
929004654601	DL252 G2 R SQ 1300 65K 18W 8" EMC	+/-10%	(0.313, 0.337) <6SDCM
929004654701	DL252 G2 R SQ 2000 65K 24W 11" EMC	+/-10%	(0.313, 0.337) <6SDCM
929002654801	SL052 RD SPOT 070 4.2W 27K WH WV	-10% / +25%	⟪ , 0.463, 0.42 ⟫ 6SDCM
929002655001	SL052 RD SPOT 070 4.2W 65K WH WV	-10% / +25%	(0.313, 0.337 ⟫ 6SDCM
929002655401	SL052 RD SPOT 070 6.2W 27K WH WV	-10+25	⟪ , 0.457, 0.41 ⟫ 6SDCM
929002655601	SL052 RD SPOT 070 6.2W 65K WH WV	-10+25	⟪ , 0.312, 0.328 ⟫ 6SDCM
929004653201	DL252 G2 R Rd 400 40K 6W 4" EMC	+/-10%	(0.380, 0.380) <6SDCM
929004653501	DL252 G2 R Rd 900 40K 12W 6" EMC	+/-10%	(0.380, 0.380) <6SDCM
929004653701	DL252 G2 R Rd 1300 30K 18W 8" EMC	+/-10%	(0.440, 0.403) <6SDCM
929004653801	DL252 G2 R Rd 1300 40K 18W 8" EMC	+/-10%	(0.380, 0.380) <6SDCM
929004655501	DL252 G2 SF SQ 900 65K 12W 6" EMC	+/-10%	(0.313, 0.337) <6SDCM
929004655601	DL252 G2 SF SQ 1300 65K 18W 8" EMC	+/-10%	(0.313, 0.337) <6SDCM
929002655101	SL052 SQ SPOT 070 4.2W 27K WH WV	-10% / +25%	⟪ , 0.463, 0.42 ⟫ 6SDCM
929002655301	SL052 SQ SPOT 070 4.2W 65K WH WV	-10% / +25%	⟪ , 0.313, 0.337 ⟫ 6SDCM
929002655701	SL052 SQ SPOT 070 6.2W 27K WH WV	-10% / +25%	⟪ , 0.457, 0.41 ⟫ 6SDCM
929002655901	SL052 SQ SPOT 070 6.2W 65K WH WV	-10% / +25%	⟪ , 0.312, 0.328 ⟫ 6SDCM

Over Time Performance (IEC Compliant)

Order Code	Full Product Name	Driver failure rate at 5000 h
929004655001	DL252 G2 SF RD 900 65K 12W 6" EMC	-
929004655201	DL252 G2 SF RD 1300 40K 18W 8" EMC	-
929004655301	DL252 G2 SF RD 1300 65K 18W 8" EMC	-
929004654101	DL252 G2 R SQ 400 30K 6W 4" EMC	-
929004654201	DL252 G2 R SQ 400 65K 6W 4" EMC	-
929004654301	DL252 G2 R SQ 900 30K 12W 6" EMC	-
929004654401	DL252 G2 R SQ 900 65K 12W 6" EMC	-
929004654601	DL252 G2 R SQ 1300 65K 18W 8" EMC	-
929004654701	DL252 G2 R SQ 2000 65K 24W 11" EMC	-
929002654801	SL052 RD SPOT 070 4.2W 27K WH WV	5 %
929002655001	SL052 RD SPOT 070 4.2W 65K WH WV	5 %
929002655401	SL052 RD SPOT 070 6.2W 27K WH WV	5
929002655601	SL052 RD SPOT 070 6.2W 65K WH WV	5
929004653201	DL252 G2 R Rd 400 40K 6W 4" EMC	-
929004653501	DL252 G2 R Rd 900 40K 12W 6" EMC	-
929004653701	DL252 G2 R Rd 1300 30K 18W 8" EMC	-
929004653801	DL252 G2 R Rd 1300 40K 18W 8" EMC	-

Order Code	Full Product Name	Driver failure rate at 5000 h
929004655501	DL252 G2 SF SQ 900 65K 12W 6" EMC	-
929004655601	DL252 G2 SF SQ 1300 65K 18W 8" EMC	-
929002655101	SL052 SQ SPOT 070 4.2W 27K WH WV	5 %
929002655301	SL052 SQ SPOT 070 4.2W 65K WH WV	5 %
929002655701	SL052 SQ SPOT 070 6.2W 27K WH WV	5 %
929002655901	SL052 SQ SPOT 070 6.2W 65K WH WV	5 %

© 2026 Signify Holding. All rights reserved. The information provided herein is subject to change, without notice. Signify does not give any representation or warranty as to the accuracy or completeness of the information included herein and shall not be liable for any action in reliance thereon. The information presented in this document is not intended as any commercial offer and does not form part of any quotation or contract, unless otherwise agreed by Signify. Philips and the Philips Shield Emblem are registered trademarks of Koninklijke Philips N.V.