PHILIPS

BN126C LED80S/830_40
PSD L1500

911401850387



Multi ColorTemp

CoreLine Batten, All-in, 57 W, L1500 mm, 8000 lm, 3000 K, 4000 K, DALI, Opal, IP20/40, EL-ready

L1500 mm, Metal–Plastic, White, Signal white (RAL9003), Power supply unit with DALI interface, All-in, Multi Color Temperature, 8000 lm, 57 W, 140 lm/W, 3000 K, 4000 K, (0.43,0.40) SDCM≤3, Symmetrical, Opal, Polycarbonate, IP20/40 | Finger-protected;Wire-protected, IK04 | 0.5 J standard plus, Safety class I, Push-in connector 3-pole, Simple Connection and removable cover available for feed-through wiring 1-phase (internal wiring is not included), DC operated central emergency lighting, Self-contained emergency lighting is possible when used with a compatible battery kit accessory

Warnings and Safety

- The product is IPX0 & as such is not protected against water ingress & as such we strongly recommend that the environment in which the luminaire is to be installed is suitably checked
- If the above advice is not taken and the luminaires are subject to water ingress, Philips / Signify cannot guarantee safe failure & product warranty will become void

General Information

Number of gear units	1 unit
Driver included	Yes
Sustainability rating	Unclassified
Service tag	Yes
Value ladder	Performance
Warranty period	5 years

Light Technical

Luminous Flux	8,000 lm
Correlated Color Temperature (Nom)	3000 K
Luminous Efficacy (rated) (Nom)	140 lm/W
Color rendering index (CRI)	>80
Light source color	Multi Color Temperature
Optic type	Symmetrical
Luminaire light beam spread	120°
Unified glare rating CEN	25
All-in Type	All-in, Multi Color Temperature

Operating and Electrical

Input Voltage	220 to 240 V
Line Frequency	50 to 60 Hz
Inrush current	15.7 A
Inrush time	0.678 ms
Power Consumption	57 W
Power Factor (Fraction)	0.9
Connection	Push-in connector 3-pole
Cable	-
Number of products on MCB of 16 A type B	8
Suitable for random switching	Yes
Protection class IEC	Safety class I
Feed-through wiring	Simple Connection and removable cover available for feed-through wiring 1-phase (internal wiring is not included)

Controls and Dimming

Dimmable	Yes
Driver/power unit/transformer	Power supply unit with DALI interface
Control interface	DALI
Constant light output	No
DALI Standard	DALI-2™

Mechanical and Housing

Housing Material	Metal–Plastic
Reflector material	Polycarbonate
Optic material	Polycarbonate
Optical cover material	Polycarbonate
Fixation material	Steel
Housing Color	White
Optical cover finish	Opal
Overall length	1,450 mm
Overall width	65 mm
Overall height	65 mm
Dimensions (Height x Width x Depth)	65 x 65 x 1450 mm
Ingress protection code	IP20/40 [Finger-protected;Wire-protected]
Mech. impact protection code	IK04 [0.5 J standard plus]
Mounting	Ceiling
Net Weight (Piece)	1.310 kg

Emergency Operation

Emergency flux	300 lm
Central Emergency	Yes
Emergency lighting	DC operated central emergency lighting
Emergency function testing method	Manual / Test button

Approval and Application

Glow-wire test	Temperature 650 °C, duration 30 s
Flammability mark	For mounting on normally flammable surfaces
CE mark	Yes
ENEC mark	ENEC mark
Photobiological risk	Photobiological risk group 0 @200mm to EN62778
Photobiological risk specification	0.2 m
EU RoHS compliant	Yes
Performance ambient temperature Tq	25 °C
Stroboscopic effect visibility measure (SVM)	0.4
Ambient temperature range	-20 to +40 °C

Initial Performance (IEC Compliant)

Luminous flux tolerance	-10%,+15%
Initial chromaticity	(0.43,0.40) SDCM≤3
Power consumption tolerance	+/-10%
Standard Deviation of Colour Matching (McAdam ellipse)	SDCM≤3

Over Time Performance (IEC Compliant)

Control gear failure rate at median useful life 50000 h	5 %
Control gear failure rate at median useful life 100000 h	0.1 %
Lumen maintenance (EN-IEC 62722-2-1) at median useful life* 50000 h	L80
Lumen maintenance (EN-IEC 62722-2-1) at median useful life* 100000 h	L80

Dimensional drawing

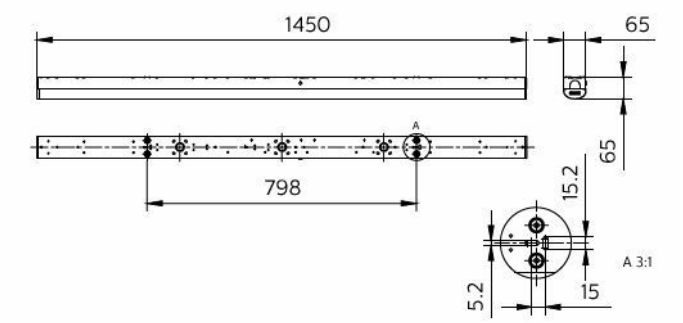

Sustainability Data

Repair class	Repair Class D, this product is not designed to be repaired.
Embedded carbon (A1-A3)	15.8 kg CO_2e
Product non-virgin material ratio	35.8 %
Recyclable content ratio of the finished product	50.9 %
GWP total B6 (kg CO2eq) Declared Unit	Please calculate using your local energy mix value: Power Declared Unit (kW) * Service life (hrs) Declared Unit * Energy mix (kg CO2eq / kwh)
GWP total B6 (kg CO2eq) Functional Unit	Please calculate using your local energy mix value: Power Declared Unit (kW) * 1000 (lm) /lumen output (lm) Declared Unit * 35000 (hrs) * Energy mix (kg CO2 eq / kwh)
Non-virgin material ratio of the packaging	Cardboard > 80% recycled
Packaging Recyclable content ratio	Cardboard recycling rate > 80%
Packaging Material	Cardboard

Product Data

Order product name	BN126C LED80S/830_40 PSD L1500
Full product name	BN126C LED80S/830_40 PSD L1500
Full product code	872016976838399
Order code	911401850387
Material Nr. (12NC)	911401850387
Numerator - Quantity Per Pack	1
EAN/UPC - Product/Case	8720169768383
Numerator - Packs per outer box	6
EAN/UPC - Case	8720169768468

Polar normal diagrams

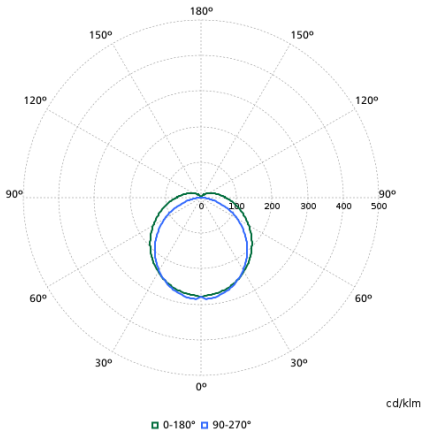

Compatible Accesories

Accessory Image	Accessory Code	Accessory Name	Website
	911401776802	BN126Z SC	Product Website
	912401483603	EM300V ELB_ELP3 kit HV 6.4V 2000mAh LFP	Product Website

Related Documents

Documents and certificates	Document Name	Download
Installation Instructions	MI-CoreLine-BN126C-All-in-combined-upgraded.pdf	Download

Photometry and lighting design	Document Name	Download
IES File	bn126c-led80s-830-40-psd-l1500-911401850387.ies	Download
LDT File	bn126c-led80s-830-40-psd-l1500-911401850387.ldt	Download
ROLF File	bn126c-led80s-830-40-psd-l1500-911401850387.rolfz	Download
ULD File	bn126c-led80s-830-40-psd-l1500-911401850387.uld	Download
Revit file	bn126c-led80s-830-40-psd-l1500-911401850387.zip	Download

© 2026 Signify Holding. All rights reserved. The information provided herein is subject to change, without notice. Signify does not give any representation or warranty as to the accuracy or completeness of the information included herein and shall not be liable for any action in reliance thereon. The information presented in this document is not intended as any commercial offer and does not form part of any quotation or contract, unless otherwise agreed by Signify. Philips and the Philips Shield Emblem are registered trademarks of Koninklijke Philips N.V.