PHILIPS

HF-Regulator II for PL-T/C

HFRPLTC



HF-Regulator II for PL-T/C – Dimming: a next step in energy saving

Compact, high-frequency electronic dimming ballast, using the analog protocol (1-10 V) for PL-T, PL-C and PL-R lamps. The ballast is primarily designed for Indoor application. For outdoor application, the luminaire should be minimum ClassIand need to be sufficiently protected against water & dust. The installation should also be guard against any lightening surge or any other necessary electrical protection as deemed in such typical installation & application.

Benefits

- The lamp power can be dimmed from 1 to 100% via the Analog control input (in accordance with the 1-10 V industry standard)
- Compliant with European and Asian norms and suitable for emergency lighting systems
- HF operation improves light quality, lamp lifetime
- Combined with controls, additional energy savings can be achieved

Applications

- Indoor, general and task lighting applications in combination with lighting control systems (personal control, daylight linking and/or movement detection)

Features

- Programmed start: flicker-free ignition < 0.5 seconds and striation-free operation, no stroboscopic effects. Preheating the lamp electrodes enables the lamps to be switched on and off without reducing life
- Smart power ensures constant light, independent of mains fluctuations

- Up to 60% reduction in energy consumption by using automatic lighting control systems
- Stop circuit is activated within 5 seconds in the event of lamp failure (safety stop), and ballast resets automatically after lamp replacement

Versions



GPPR_RPLTC_0003-Product photo

Dimensional drawing

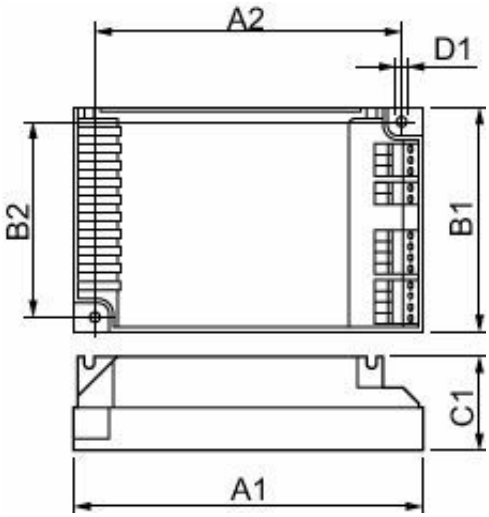

Product	D1	C1	A1	A2	B1	B2
HF-R 2 26-42 PL-T/C EII 220-240V 50/60Hz	4.5 mm	33.0 mm	123.0 mm	111.0 mm	79.0 mm	67.0 mm

Operating and Electrical

Input Voltage	220 to 240 V
Line Frequency	50 to 60 Hz
Input Frequency	50 to 60 Hz
Number of Products on MCB (16A Type B) (Nom)	12

Mechanical and Housing

Housing	S 123x79x33

Approval and Application

Energy Efficiency Index	A1 BAT

© 2026 Signify Holding. All rights reserved. The information provided herein is subject to change, without notice. Signify does not give any representation or warranty as to the accuracy or completeness of the information included herein and shall not be liable for any action in reliance thereon. The information presented in this document is not intended as any commercial offer and does not form part of any quotation or contract, unless otherwise agreed by Signify. Philips and the Philips Shield Emblem are registered trademarks of Koninklijke Philips N.V.