Metronomis 1 Poles and Brackets

JRP555



Bespoke solutions

Metronomis is a family of highly distinctive luminaires and dedicated poles and brackets, which can be used with a wide diversity of optics to provide architects and lighting designers with the total solution needed to create a unified, consistent lighting design that still reflects the differences in urban culture and history. In its daytime appearance, Metronomis integrates harmoniously with any street scene, while its night-time appearance is both functional – guiding people and traffic safely through the city – and decorative, creating a pleasant ambience in city squares and pedestrian precincts.

Benefits

- The Metronomis product range offers a total solution to architects and lighting designers
- Together with the available poles and brackets, the Metronomis product family forms a flexible, integrated range that adds harmony to the urban environment

Applications

- Urban and architectural areas
- Commercial and business centers

Features

- Dedicated poles and brackets
- The Metronomis pole is an exclusive design, with heights from 3.5 to 6m, tailored to the Metronomis luminaire range
- The brackets are designed to ensure visual consistency between the column and the luminaire

Versions

METRONOMIS 1 JRP555
POLE BRACKET



METRONOMIS 1 JRP555
WALL BRACKET



METRONOMIS 1 JRP556
WALL BRACKET



METRONOMIS 1 JRP557
POLE BRACKET

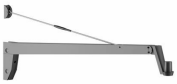

METRONOMIS 1 JRP557
WALL BRACKET

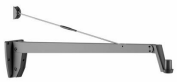

METRONOMIS 1 JRP558
POLE BRACKET



METRONOMIS 1 JRP558
WALL BRACKET



YGB560 METRONOMIS 1
3M50 FLANGE PLATE
DOUBLE SHORT BRACKETS





YGB560 METRONOMIS 1
6M FLANGE PLATE
DOUBLE LONG BRACKETS



YGP560 METRONOMIS 1
6M FLANGE PLATE
DOUBLE SHORT BRACKETS



YGP560 METRONOMIS 1
6M FLANGE PLATE POST
TOP



YGP560 METRONOMIS 1
6M FLANGE PLATE SINGLE
LONG BRACKET

Dimensional drawing

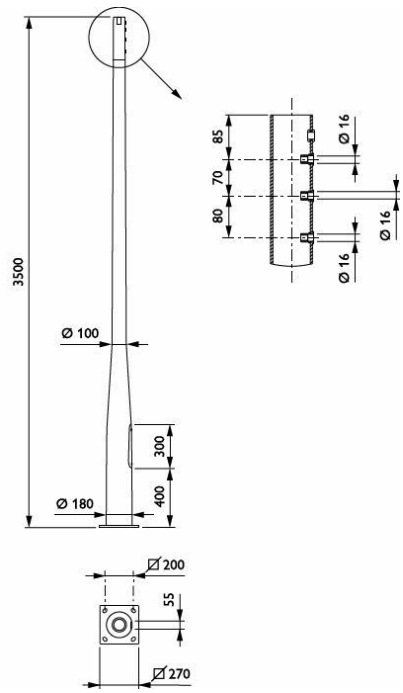

Pole with flange - 3.5 m - 60 mm - RAL color

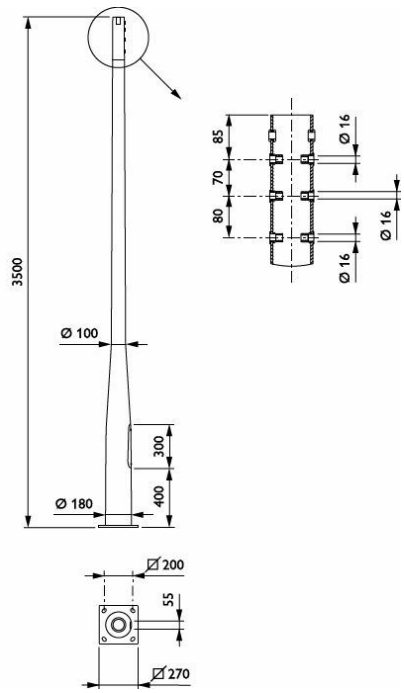

Pole with flange - 3.5 m - 60 mm - RAL color

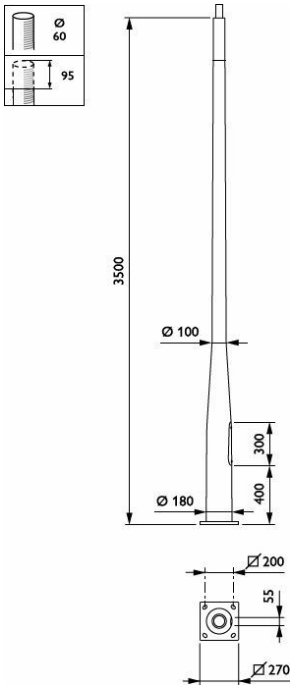

Pole with flange - 3.5 m - 60 mm - RAL color

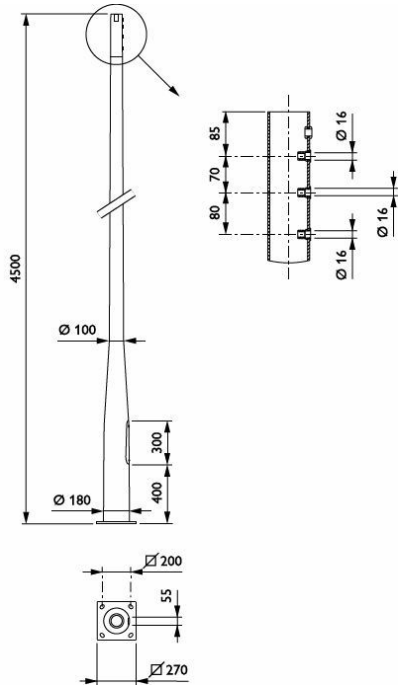

Pole with flange - 4.5 m - 60 mm - RAL color

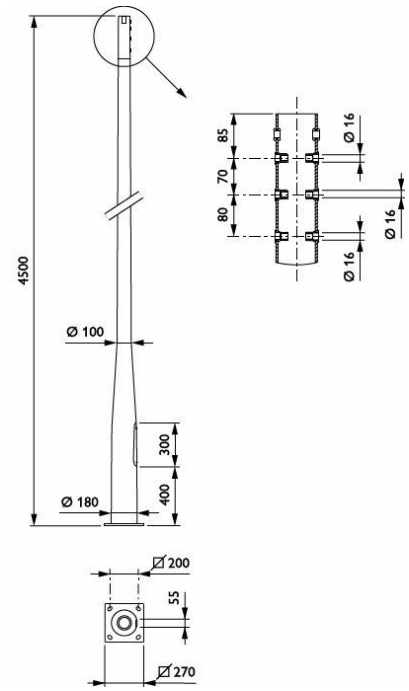

Pole with flange - 4.5 m - 60 mm - RAL color

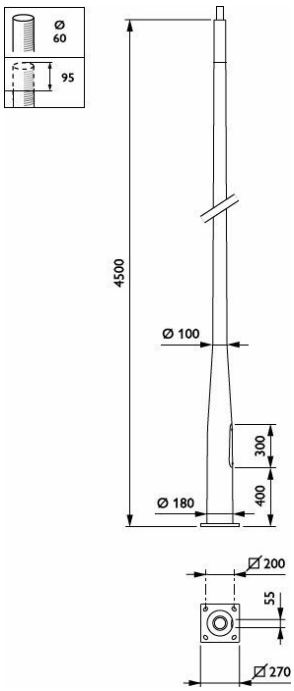

Pole with flange - 4.5 m - 60 mm - RAL color

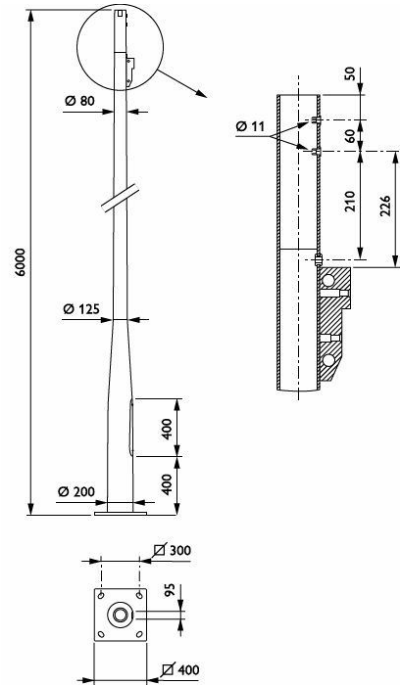

Pole with flange - 6.0 m - 60 mm - RAL color

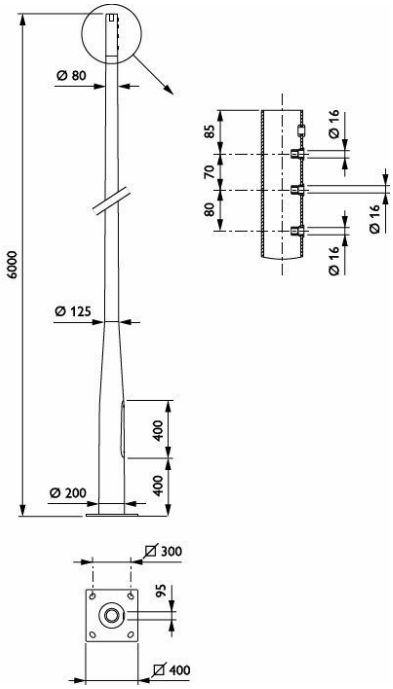

Pole with flange - 6.0 m - 60 mm - RAL color

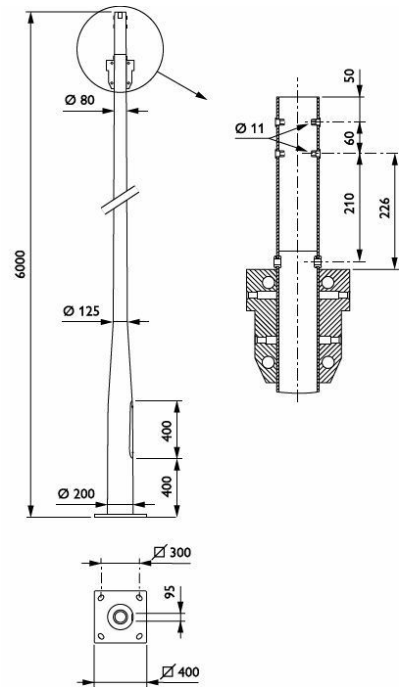

Pole with flange - 6.0 m - 60 mm - RAL color

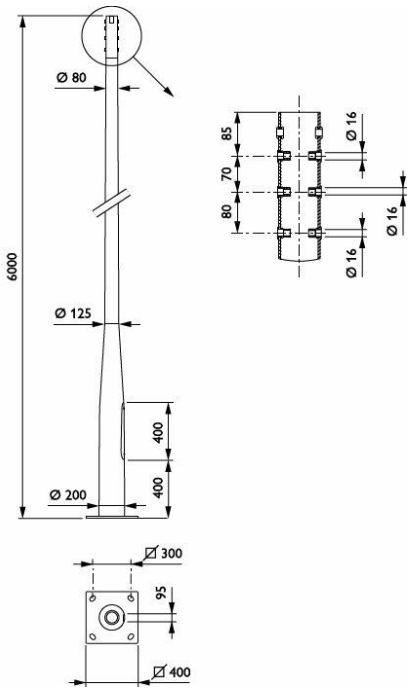

Pole with flange - 6.0 m - 60 mm - RAL color

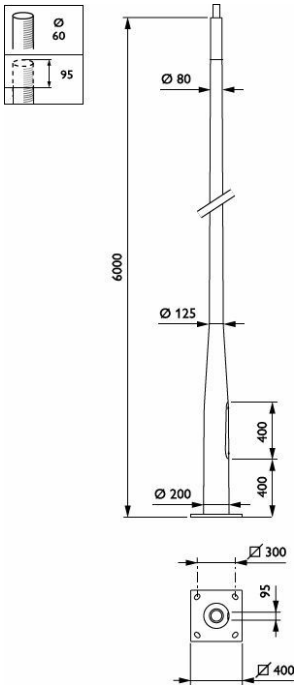

Pole with flange - 6.0 m - 60 mm - RAL color

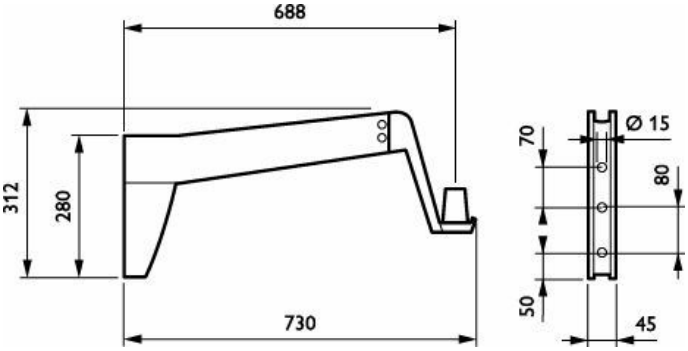

690 mm - RAL color

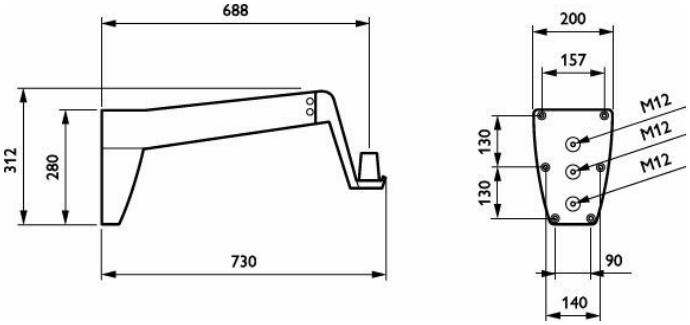

690 mm - RAL color

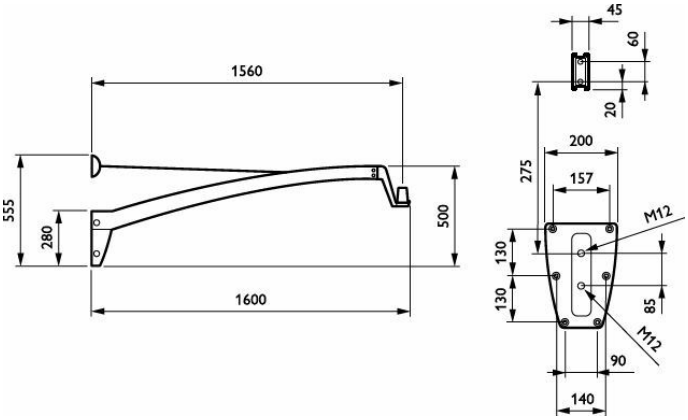

1560 mm - RAL color

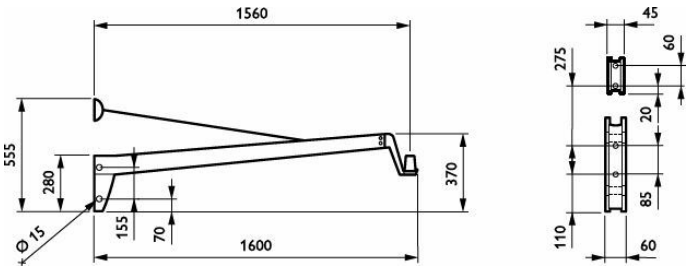

1560 mm - RAL color

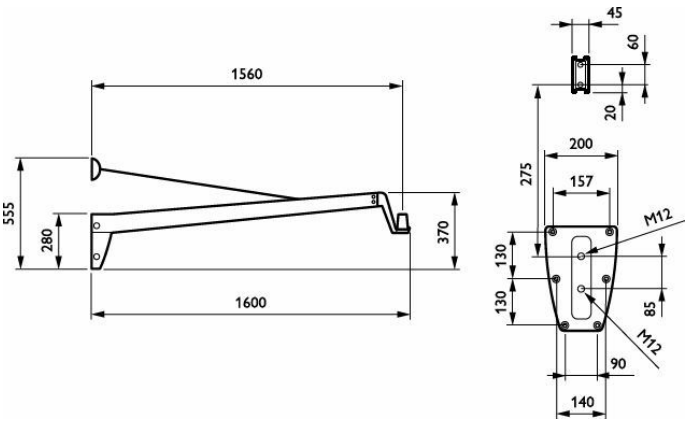

1560 mm - RAL color

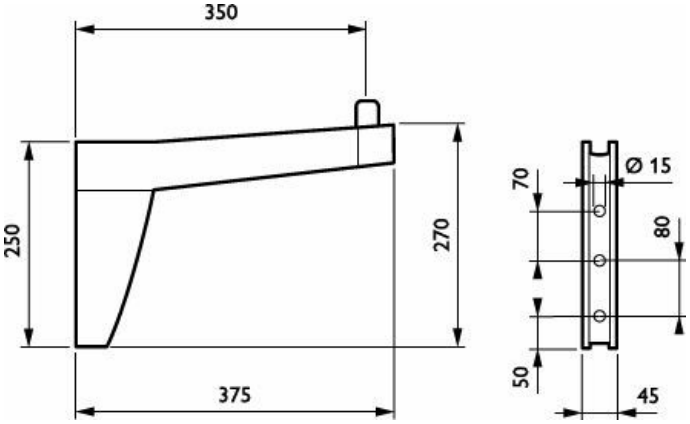

350 mm - RAL color

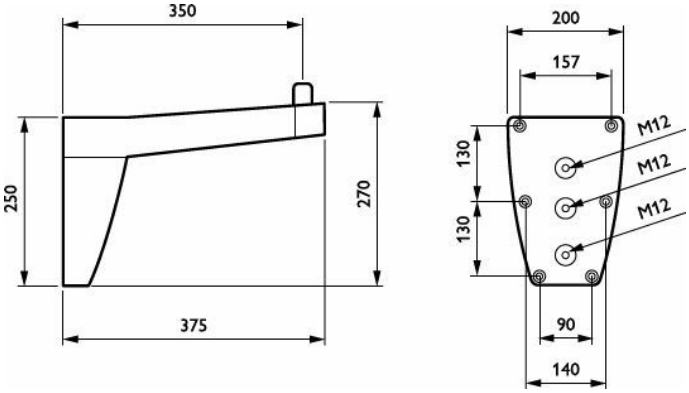

350 mm - RAL color

Approval and Application

CE mark	Yes

© 2026 Signify Holding. All rights reserved. The information provided herein is subject to change, without notice. Signify does not give any representation or warranty as to the accuracy or completeness of the information included herein and shall not be liable for any action in reliance thereon. The information presented in this document is not intended as any commercial offer and does not form part of any quotation or contract, unless otherwise agreed by Signify. All trademarks are owned by Signify Holding or their respective owners.