PHILIPS

BVP373 32LED RGBWW 220V 60 DMX 80W HP

911401775393



UniFlood C Pro, 2895 lm, 80 W, RGBW, Dynamic DMX/RDM, Safety class I

Philips UniFlood C Pro offers a unique rugged elegance, with a cylindrical form and flowing lines that connect the front and back housings beautifully. This is compact architectural floodlighting design where every element has a purpose; the front section provides exceptional lighting, while the back section houses all the electrical components. Between the two, the fins dissipate heat and also serve as a decorative element. Exterior-rated, Philips UniFlood C Pro is a cost-effective, architectural LED floodlight that is designed for façade, landscape and outdoor floodlighting applications. The robust mechanical design and high-efficiency optics make it ideal for illuminating multi-story exterior façades, bridges, landmarks and monuments. Architects and designers have the freedom to explore a wide range of concepts and designs with no limitations, thanks to a range of colors, multiple spread lenses and a DMX512/RDM control option.

Warnings and Safety

- For outdoor use only

General Information

Color Code	RGBW
Driver included	Yes
Lighting Technology	LED
Value ladder	Performance

Light Technical

Luminous Flux	2,895 lm
Correlated Color Temperature (Nom)	-
Luminous Efficacy (rated) (Nom)	36 lm/W
Color rendering index (CRI)	N.A.
Light source color	RGBW

Operating and Electrical

Input Voltage	220 to 240 V
Line Frequency	50 to 60 Hz
Power Consumption	80 W
Power Factor (Fraction)	0.9
Connection	Flying leads/wires and 2 Push-in connector 4-pole
Cable	Cable 0.5 m without plug 3-pole and 2 Cables 0.5 m with connector 4-pole
Protection class IEC	Safety class I

Controls and Dimming

Dimmable	Yes
Control interface	Dynamic DMX/RDM

Mechanical and Housing

Housing Material	Aluminum die cast
Optical cover material	Polycarbonate
Housing Color	Dark gray
Ingress protection code	IP66 [Dust penetration-protected, jet-proof]
Mech. impact protection code	IK06 [1 J]
Optical cover type	Clear glass
Net Weight (Piece)	6.000 kg

Approval and Application

CE mark	Yes
Ambient temperature range	-40 to +50 °C

Initial Performance (IEC Compliant)

Luminous flux tolerance	+/-10%
Power consumption tolerance	+/-10%

Product Data

Order product name	BVP373 32LED RGBWW 220V 60 DMX 80W HP
Full product name	BVP373 32LED RGBWW 220V 60 DMX 80W HP
Full product code	872016950521699
Order code	911401775393
Material Nr. (12NC)	911401775393
Numerator - Quantity Per Pack	1
EAN/UPC - Product/Case	8720169505216
Numerator - Packs per outer box	2
EAN/UPC - Case	8720169505216

Dimensional drawing

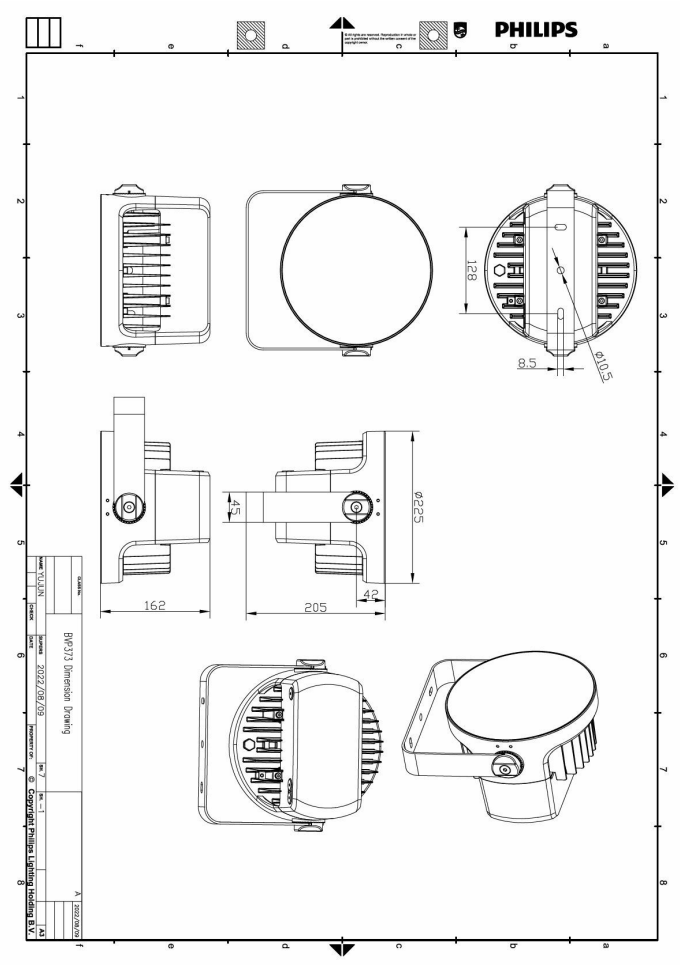

© 2026 Signify Holding. All rights reserved. The information provided herein is subject to change, without notice. Signify does not give any representation or warranty as to the accuracy or completeness of the information included herein and shall not be liable for any action in reliance thereon. The information presented in this document is not intended as any commercial offer and does not form part of any quotation or contract, unless otherwise agreed by Signify. Philips and the Philips Shield Emblem are registered trademarks of Koninklijke Philips N.V.