PHILIPS

HF-Regulator Intelligent Touch DALI for TL5/TL-D/PL-L lamps

HFRITDT5



Dimming the next step in energy saving

This intelligent high-frequency electronic dimming ballast utilizes the DALI or Touch and Dim push-button protocol for fluorescent lamps. It meets A1BAT requirements, thereby pre-empting upcoming legislation. With a special command you can retrieve the system's mains power consumption, and with another you can find out which lamp wattage is connected. Combined with controls, additional energy savings can be achieved. The ballast is primarily designed for Indoor application. For outdoor application, the luminaire should be minimum Classland need to be sufficiently protected against water & dust. The installation should also be guard against any lightening surge or any other necessary electrical protection as deemed in such typical installation & application.

Benefits

- Extremely low stand-by losses, controlled cut-off for dim levels above 80%, hybrid control dimming (current control at 100% and power control at 1%) – combined with MASTER TL5 Eco the most energy-efficient solution
- HF operation improves light quality and lamp lifetime.
- Compliant with European and Asian norms and suitable for emergency lighting systems

Applications

- Indoor, general and task lighting applications in combination with lighting control systems (personal control, daylight linking and/or movement detection)

Features

- HF-R Intelligent recognizes what type of lamp (T5 HE, HO, ECO, TL-D, PL-L) is connected and drives it accordingly
- Programmed start: flicker-free ignition < 1.0 second and striation-free operation, no stroboscopic effects. Preheating the lamp electrodes enables the lamps to be switched on and off without reducing life

- Smart power ensures constant light, independent of mains fluctuations and dimming from 1 to 100%
- Stop circuit is activated within 5 seconds in the event of lamp failure (safety stop), and ballast resets automatically after lamp replacement
- Programmable for intelligent functionalities via Philips MultiOne: Corridor mode, Emergency DC dim level, Burn-in time

Versions



GPPR RITD 0001

Dimensional drawing

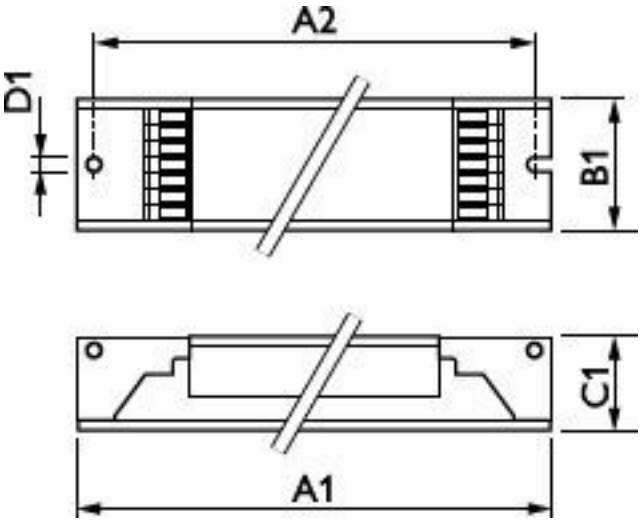

Product	D1	C1	A1	A2	B1
HF-Ri TD 1 28/35/49/54 TL5 E+ 195-240V	4.1 mm	22.0 mm	360.0 mm	350.0 mm	30.0 mm
HF-Ri TD 2 14/21/24/39 E+	4.1 mm	21.0 mm	360.0 mm	350.0 mm	30.0 mm
HF-Ri TD 2 28/35/49/54 TL5 E+ 195-240V	4.1 mm	22.0 mm	360.0 mm	350.0 mm	30.0 mm
HF-Ri TD 3 14/24 TL5 E+ 195-240V	4.2 mm	22.0 mm	360.0 mm	350.0 mm	39.0 mm
HF-Ri TD 4 14/24 TL5 E+ 195-240V	4.2 mm	22.0 mm	360.0 mm	350.0 mm	39.0 mm

Operating and Electrical

Input Voltage	195-240 V
Line Frequency	50 to 60 Hz
Input Frequency	50 to 60 Hz

Approval and Application

Energy Efficiency Index	A1 BAT

Operating and Electrical

Order Code	Full Product Name	Number of Products on MCB (16A Type B) (Nom)
913700679066	HF-Ri TD 3 14/24 TL5 E+ 195-240V	16
913700679166	HF-Ri TD 4 14/24 TL5 E+ 195-240V	16
913700695666	HF-Ri TD 1 28/35/49/54 TL5 E+ 195-240V	39
913700695866	HF-Ri TD 2 28/35/49/54 TL5 E+ 195-240V	18
913700698466	HF-Ri TD 2 14/21/24/39 E+	16

Mechanical and Housing

Order Code	Full Product Name	Housing
913700679066	HF-Ri TD 3 14/24 TL5 E+ 195-240V	L 360x39x22
913700679166	HF-Ri TD 4 14/24 TL5 E+ 195-240V	L 360x39x22
913700695666	HF-Ri TD 1 28/35/49/54 TL5 E+ 195-240V	L 359x30x21
913700695866	HF-Ri TD 2 28/35/49/54 TL5 E+ 195-240V	L 359x30x21
913700698466	HF-Ri TD 2 14/21/24/39 E+	L 360x30x21

© 2026 Signify Holding. All rights reserved. The information provided herein is subject to change, without notice. Signify does not give any representation or warranty as to the accuracy or completeness of the information included herein and shall not be liable for any action in reliance thereon. The information presented in this document is not intended as any commercial offer and does not form part of any quotation or contract, unless otherwise agreed by Signify. Philips and the Philips Shield Emblem are registered trademarks of Koninklijke Philips N.V.