PHILIPS

WL060V gen2 11_22S/ 830_840 PSU MDU D350

911401846787



Multi ColorTemp

Multi Lumen

Ledinaire Wall-mounted gen2, All-in, 22 W, 1100 lm, 1700 lm, 2200 lm, 3000 K, 4000 K, Sensor-based dim, MDU2

Polycarbonate, White, Signal white (RAL9003), Power supply unit (On/Off), Programmable movement and light sensor, All-in, Multi Color Temperature, All-in, Multi Lumen, 1100 lm, 1700 lm, 2200 lm, 22 W, 100 lm/W, 3000 K, 4000 K, (0.40,0.40) SDCM<5, Symmetric 110^{0}, Polymethyl methacrylate, IP44 | Wire-protected, splash-proof, IK03 | 0.3 J, Safety class II, Push-in connector 3-pole

General Information

Number of gear units	1 unit
Driver included	Yes
Sustainability rating	Unclassified
Service tag	No
Warranty period	5 years

Light Technical

Luminous Flux	1,100 lm
Correlated Color Temperature (Nom)	3000 K
Luminous Efficacy (rated) (Nom)	100 lm/W
Color rendering index (CRI)	>80
Light source color	Multi Color Temperature
Optic type	Symmetric 110^{0}
Luminaire light beam spread	110°
All-in Type	All-in, Multi Color Temperature

Operating and Electrical

Input Voltage	220 to 240 V
Line Frequency	50 or 60 Hz
Inrush current	3.28 A
Inrush time	0.044 ms
Power Consumption	22 W
Power Factor (Fraction)	0.9
Connection	Push-in connector 3-pole
Cable	-
Number of products on MCB of 16 A type B	-
Suitable for random switching	Yes (relates to presence/ movement detection and daylight harvesting)
Protection class IEC	Safety class II

Controls and Dimming

Dimmable	Yes
Driver/power unit/transformer	Power supply unit (On/Off)
Control interface	Sensor-based dim
Constant light output	No
Embedded control	Programmable movement and light sensor

Mechanical and Housing

Housing Material	Polycarbonate
Reflector material	Polycarbonate
Optic material	Polymethyl methacrylate
Optical cover material	Polymethyl methacrylate
Fixation material	-
Housing Color	White
Optical cover finish	-
Overall height	82 mm
Overall diameter	350 mm
Ingress protection code	IP44 [Wire-protected, splash-proof]
Mech. impact protection code	IK03 [0.3 J]
Net Weight (Piece)	0.650 kg

Approval and Application

Glow-wire test	Temperature 650 °C, duration 30 s
Flammability mark	For mounting on normally flammable surfaces
CE mark	Yes
ENEC mark	-
EU RoHS compliant	Yes
Performance ambient temperature Tq	25 °C
Flickering value (PstLM) - Flickering value as per EN 61000-3-3	1
Ambient temperature range	-20 to +40 °C

Initial Performance (IEC Compliant)

Luminous flux tolerance	+/-10%
Initial chromaticity	(0.40,0.40) SDCM<5
Power consumption tolerance	+/-10%

Over Time Performance (IEC Compliant)

Control gear failure rate at median useful life 50000 h	7.5 %
Lumen maintenance (EN-IEC 62722-2-1) at median useful life* 50000 h	L70

Sustainability Data

Repair class	Repair Class D, this product is not designed to be repaired.
Non-virgin material ratio of the packaging	Cardboard > 80% recycled
Packaging Recyclable content ratio	Cardboard recycling rate > 80%
Packaging Material	Cardboard

Product Data

Order product name	WL060V gen2 11_22S/830_840 PSU MDU D350
Full product name	WL060V gen2 11_22S/830_840 PSU MDU D350
Full product code	872016976753999
Order code	911401846787
Material Nr. (12NC)	911401846787
Numerator - Quantity Per Pack	1
EAN/UPC - Product/Case	8720169767539
Numerator - Packs per outer box	10
EAN/UPC - Case	8720169767614

Dimensional drawing

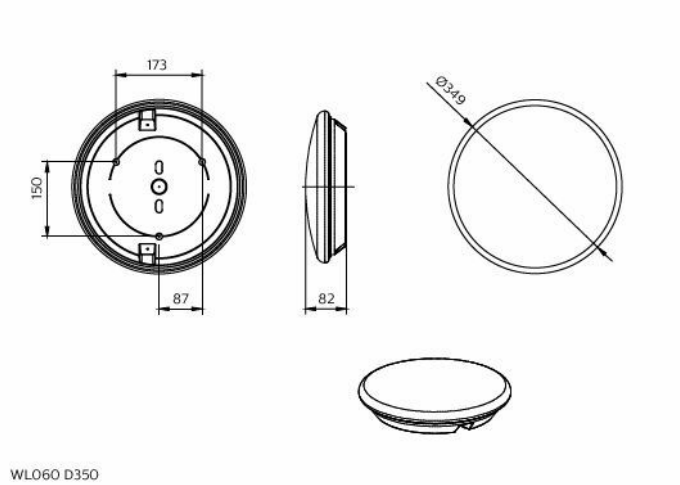

Compatible Accesories

Accessory Image	Accessory Code	Accessory Name	Website
	911401875487	WL070Z Deco Ring BK	Product Website

Related Documents

Documents and certificates	Document Name	Download
Installation Instructions	Ledinaire-WM-WL060V-D350-Installation-Instructions.pdf	Download

© 2026 Signify Holding. All rights reserved. The information provided herein is subject to change, without notice. Signify does not give any representation or warranty as to the accuracy or completeness of the information included herein and shall not be liable for any action in reliance thereon. The information presented in this document is not intended as any commercial offer and does not form part of any quotation or contract, unless otherwise agreed by Signify. Philips and the Philips Shield Emblem are registered trademarks of Koninklijke Philips N.V.