PHILIPS

GreenSpace G6

9427277



GreenSpace G6: Low energy LED downlights with high visual comfort

Philips GreenSpace G6 builds on the GreenSpace family's reputation for superb performance, extremely low energy use, and high visual comfort. This next generation of reliable LED downlights comes in a highly-compact design with a deep, recessed architecture and increased reflector depth to highlight the smallest of details. GreenSpace G6 is also a shining example of versatility. This energy-saving LED downlight is available in a comprehensive range of configurations from 600 to 3,550 lumen, with the option to choose fixed, dimmable, or Interact Ready variants. This makes GreenSpace G6 the perfect 'mix and match' solution for potentially broad and extended applications that require different lighting ambiances, with one cohesive luminaire look and feel.

Benefits

- Energy-efficient LED
- Compact design
- Visual comfort
- Option of glossy facetted (UGR19) or matte white reflector
- Durable LED quality and reliability

Applications

- Offices
- retail
- Hospitality
- other potential indoor open areas

Features

- High system efficacy - average 120 lm/W
- Deep recessed architecture with increased reflector depth
- Spacious installation area with improved narrow rim width
- 50,000 hours lifetime @L80/B50 Ta 25°C
- DALI and wireless Interact compatible

Versions



GreenSpace G6



GreenSpace G6



GreenSpace G6



GreenSpace G6

GreenSpace G6



GreenSpace G6



GreenSpace G6



GreenSpace G6

GreenSpace G6



GreenSpace G6



GreenSpace G6

GreenSpace G6



Data subject to change

Dimensional drawing

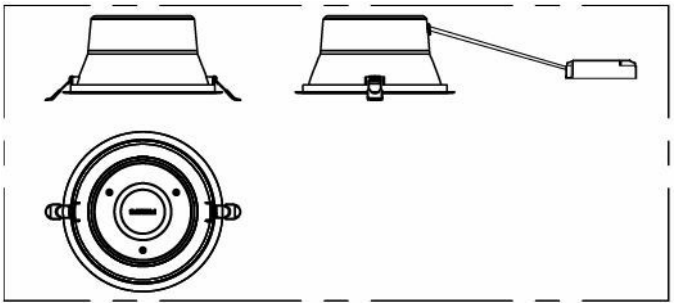

DN394X LED40/840 L1W D200 WH GCG2HE

DN392B LED18/840 PSD D150 AL GCG2HE

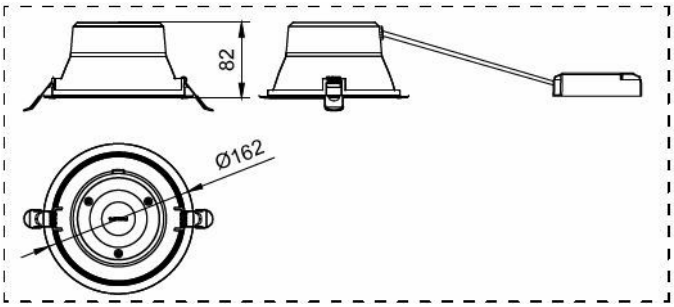

DN392X LED20/840 L1W D150 AL GCG2HE

DN391B LED12/830 P10PSD D100 ALWP GMG2HE

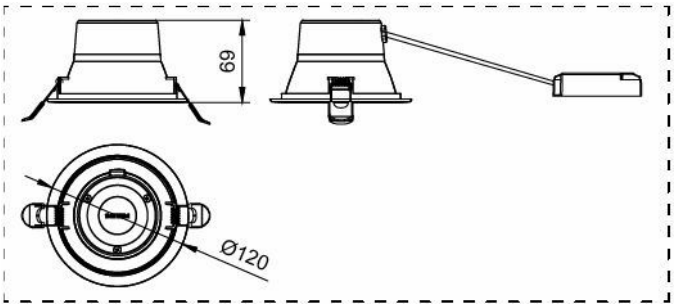

DN391X LED15/840 L1W D100 WH GCG2HE

DN392X LED17/840 P15L1W D150 WH CAUG2

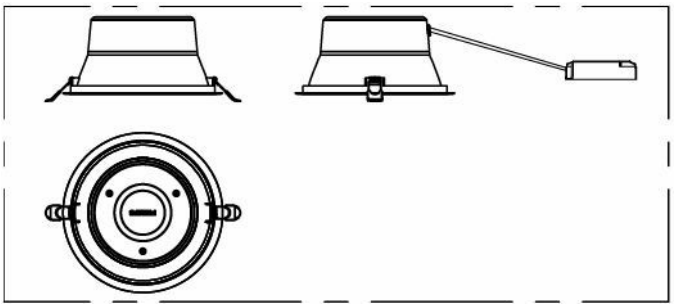

DN393X LED22/840 P20L1W D200 WH CAUG2

DN394B LED38/865 PSU D200 AL GCG2HE

General Information

Gear	-
Service tag	Yes

Operating and Electrical

Input Voltage	220 to 240 V
Line Frequency	50 or 60 Hz
Protection class IEC	Safety class II

Mechanical and Housing

Mech. impact protection code	IK03 [0.3 J]
Optical cover type	Polycarbonate Diffuser

Approval and Application

Glow-wire test	Temperature 650 °C, duration 5 s
Flammability mark	-
CE mark	Yes
ENEC mark	-
Ambient temperature range	-20 to +40 °C

General Information

Order Code	Full Product Name	Number of gear units	Driver included
911401539044	DN394X LED38/840 L1W D200 AL GCG2HE	-	No
911401539244	DN393X LED25/840 L1W D200 AL GCG2HE	-	No
911401540044	DN394X LED38/840 P29L1W D200 AL GMG2HE	-	No
911401540244	DN393X LED25/840 P20L1W D200 AL GMG2HE	-	No
911401504045	DN391X LED8/9TNW P7PSD D100 WH WP G2	1 unit	Yes
911401504345	DN391X LED8/9TNW P7PSD D100 WH WPCAUG2	1 unit	Yes
911401520244	DN390B LED7/840 P6PSU D100WHWP CAUG2HE	-	Yes
911401520644	DN390B LED7/840 P6PSU D100 WH CAUG2HE	-	Yes
911401533644	DN391B LED15/865 P11PSU D100 WH GMG2HE	-	Yes
911401533744	DN391B LED15/840 P11PSU D100 WH GMG2HE	-	Yes
911401533844	DN391B LED15/830 P11PSU D100 WH GMG2HE	-	Yes
911401534244	DN391B LED15/865 PSU D100 WH GCG2HE	-	Yes
911401534344	DN391B LED15/840 PSU D100 WH GCG2HE	-	Yes
911401534444	DN391B LED15/830 PSU D100 WH GCG2HE	-	Yes
911401534844	DN391B LED12/865 P10PSU D100 WH GMG2HE	-	Yes
911401534944	DN391B LED12/840 P10PSU D100 WH GMG2HE	-	Yes
911401535044	DN391B LED12/830 P10PSU D100 WH GMG2HE	-	Yes
911401535544	DN391B LED12/865 PSU D100 WH GCG2HE	-	Yes
911401535644	DN391B LED12/840 PSU D100 WH GCG2HE	-	Yes
911401535744	DN391B LED12/830 PSU D100 WH GCG2HE	-	Yes
911401536144	DN390B LED7/865 P6PSU D100 WH GMG2HE	-	Yes

Order Code	Full Product Name	Number of gear units	Driver included
911401536244	DN390B LED7/840 P6PSU D100 WH GMG2HE	-	Yes
911401536344	DN390B LED7/830 P6PSU D100 WH GMG2HE	-	Yes
911401536744	DN390B LED7/865 PSU D100 WH GCG2HE	-	Yes
911401536844	DN390B LED7/840 PSU D100 WH GCG2HE	-	Yes
911401536944	DN390B LED7/830 PSU D100 WH GCG2HE	-	Yes
911401537544	DN391X LED15/865 P12WIA D100 WH G2HE	-	Yes
911401538144	DN391X LED15/830 P12WIA D100 WH G2HE	-	Yes
911401538744	DN391X LED15/840 P12WIA D100WH G2HE	-	Yes
911401578244	DN391B LED15/865 P12PSD D100 WH GMG2HE	-	No
911401578344	DN391B LED15/840 P12PSD D100 WH GMG2HE	-	No
911401578444	DN391B LED15/830 P12PSD D100 WH GMG2HE	-	No
911401578844	DN391B LED15/865 PSD D100 WH GCG2HE	-	No
911401578944	DN391B LED15/840 PSD D100 WH GCG2HE	-	No
911401579044	DN391B LED15/830 PSD D100 WH GCG2HE	-	No
911401579444	DN391B LED12/865 P10PSD D100 WH GMG2HE	-	No
911401579544	DN391B LED12/840 P10PSD D100 WH GMG2HE	-	No
911401579644	DN391B LED12/830 P10PSD D100 WH GMG2HE	-	No
911401580044	DN391B LED12/865 PSD D100 WH GCG2HE	-	No
911401580144	DN391B LED12/840 PSD D100 WH GCG2HE	-	No
911401580244	DN391B LED12/830 PSD D100 WH GCG2HE	-	No
911401539644	DN391X LED14/840 L1W D100 AL GCG2HE	-	No
911401540644	DN391X LED14/840 P11L1W D100 AL GMG2HE	-	No
911401503645	DN392X LED16/9TNW P15PSD D150 AL WP G2	1 unit	Yes
911401521944	DN392B LED20/865 P16PSU D150 ALWP GMG2HE	-	Yes
911401522044	DN392B LED20/840 P16PSU D150 ALWP GMG2HE	-	Yes
911401522144	DN392B LED20/830 P16PSU D150 ALWP GMG2HE	-	Yes
911401522244	DN392B LED20/865 PSU D150 AL WP GCG2HE	-	Yes
911401522344	DN392B LED20/840 PSU D150 AL WP GCG2HE	-	Yes
911401522444	DN392B LED20/830 PSU D150 AL WP GCG2HE	-	Yes
911401523144	DN392B LED18/865 P14PSU D150 ALWP GMG2HE	-	Yes
911401523244	DN392B LED18/840 P14PSU D150 ALWP GMG2HE	-	Yes
911401523344	DN392B LED18/830 P14PSU D150 ALWP GMG2HE	-	Yes
911401523444	DN392B LED18/865 PSU D150 AL WP GCG2HE	-	Yes
911401523544	DN392B LED18/840 PSU D150 AL WP GCG2HE	-	Yes
911401523644	DN392B LED18/830 PSU D150 AL WP GCG2HE	-	Yes
911401523744	DN391B LED12/865 P10PSU D150 ALWP GMG2HE	-	Yes
911401523844	DN391B LED12/840 P10PSU D150 ALWP GMG2HE	-	Yes
911401523944	DN391B LED12/830 P10PSU D150 ALWP GMG2HE	-	Yes
911401524044	DN391B LED12/865 PSU D150 AL WP GCG2HE	-	Yes
911401524144	DN391B LED12/840 PSU D150 AL WP GCG2HE	-	Yes
911401524244	DN391B LED12/830 PSU D150 AL WP GCG2HE	-	Yes
911401528544	DN392B LED20/865 P16PSU D150 AL GMG2HE	-	Yes

Order Code	Full Product Name	Number of gear units	Driver included
911401528644	DN392B LED20/840 P16PSU D150 AL GMG2HE	-	Yes
911401528744	DN392B LED20/830 P16PSU D150 AL GMG2HE	-	Yes
911401529144	DN392B LED20/865 PSU D150 AL GCG2HE	-	Yes
911401529244	DN392B LED20/840 PSU D150 AL GCG2HE	-	Yes
911401529344	DN392B LED20/830 PSU D150 AL GCG2HE	-	Yes
911401530944	DN392B LED18/865 P14PSU D150 AL GMG2HE	-	Yes
911401531044	DN392B LED18/840 P14PSU D150 AL GMG2HE	-	Yes
911401531144	DN392B LED18/830 P14PSU D150 AL GMG2HE	-	Yes
911401531544	DN392B LED18/865 PSU D150 AL GCG2HE	-	Yes
911401531644	DN392B LED18/840 PSU D150 AL GCG2HE	-	Yes
911401531744	DN392B LED18/830 PSU D150 AL GCG2HE	-	Yes
911401532144	DN391B LED12/865 P10PSU D150 AL GMG2HE	-	Yes
911401532244	DN391B LED12/840 P10PSU D150 AL GMG2HE	-	Yes
911401532344	DN391B LED12/830 P10PSU D150 AL GMG2HE	-	Yes
911401532744	DN391B LED12/865 PSU D150 AL GCG2HE	-	Yes
911401532844	DN391B LED12/840 PSU D150 AL GCG2HE	-	Yes
911401532944	DN391B LED13/830 PSU D150 AL GCG2HE	-	Yes
911401537244	DN392X LED18/865 P15WIA D150 AL G2HE	-	Yes
911401537844	DN392X LED18/830 P15WIA D150 AL G2HE	-	Yes
911401538444	DN392X LED18/840 P15WIA D150 AL G2HE	-	Yes
911401565944	DN392B LED18/865 P14PSD D150 ALWP GMG2HE	-	No
911401566044	DN392B LED18/840 P14PSD D150 ALWP GMG2HE	-	No
911401566144	DN392B LED18/830 P14PSD D150 ALWP GMG2HE	-	No
911401566244	DN392B LED18/865 P14PSD D150 AL GMG2HE	-	No
911401566344	DN392B LED18/840 P14PSD D150 AL GMG2HE	-	No
911401566444	DN392B LED18/830 P14PSD D150 AL GMG2HE	-	No
911401568044	DN392B LED22/865 P17PSD D150 ALWP GMG2HE	-	No
911401568144	DN392B LED22/840 P17PSD D150 ALWP GMG2HE	-	No
911401568244	DN392B LED22/830 P17PSD D150 ALWP GMG2HE	-	No
911401568344	DN392B LED22/865 PSD D150 AL WP GCG2HE	-	No
911401568444	DN392B LED22/840 PSD D150 AL WP GCG2HE	-	No
911401568544	DN392B LED22/830 PSD D150 AL WP GCG2HE	-	No
911401569244	DN392B LED18/865 PSD D150 AL WP GCG2HE	-	No
911401569344	DN392B LED18/840 PSD D150 AL WP GCG2HE	-	No
911401569444	DN392B LED18/830 PSD D150 AL WP GCG2HE	-	No
911401569544	DN391B LED12/865 P11PSD D150 ALWP GMG2HE	-	No
911401569644	DN391B LED12/840 P11PSD D150 ALWP GMG2HE	-	No
911401569744	DN391B LED12/830 P11PSD D150 ALWP GMG2HE	-	No
911401569844	DN391B LED12/865 PSD D150 AL WP GCG2HE	-	No
911401569944	DN391B LED12/840 PSD D150 AL WP GCG2HE	-	No
911401570044	DN391B LED12/830 PSD D150 AL WP GCG2HE	-	No
911401573744	DN392B LED22/865 P17PSD D150 AL GMG2HE	-	No

Order Code	Full Product Name	Number of gear units	Driver included
911401573844	DN392B LED22/840 P17PSD D150 AL GMG2HE	-	No
911401573944	DN392B LED22/830 P17PSD D150 AL GMG2HE	-	No
911401574344	DN392B LED22/865 PSD D150 AL GCG2HE	-	No
911401574444	DN392B LED22/840 PSD D150 AL GCG2HE	-	No
911401574544	DN392B LED22/830 PSD D150 AL GCG2HE	-	No
911401576144	DN392B LED18/865 PSD D150 AL GCG2HE	-	No
911401576244	DN392B LED18/840 PSD D150 AL GCG2HE	-	No
911401576344	DN392B LED18/830 PSD D150 AL GCG2HE	-	No
911401576744	DN391B LED12/865 P11PSD D150 AL GMG2HE	-	No
911401576844	DN391B LED12/840 P11PSD D150 AL GMG2HE	-	No
911401576944	DN391B LED12/830 P11PSD D150 AL GMG2HE	-	No
911401577344	DN391B LED12/865 PSD D150 AL GCG2HE	-	No
911401577444	DN391B LED12/840 PSD D150 AL GCG2HE	-	No
911401577544	DN391B LED12/830 PSD D150 AL GCG2HE	-	No
911401539744	DN391X LED15/840 L1W D100 WH GCG2HE	-	No
911401540744	DN391X LED15/840 P11L1W D100 WH GMG2HE	-	No
911401577142	DN393X LED22/840 P20L1W D200 AL CAUG2	-	Yes
911401577442	DN392X LED17/840 P15L1W D150 AL CAUG2	-	Yes
911401503745	DN391X LED7/9TNW P7PSD D100 AL WP G2	1 unit	Yes
911401524344	DN391B LED14/865 P11PSU D100 ALWP GMG2HE	-	Yes
911401524444	DN391B LED14/840 P11PSU D100 ALWP GMG2HE	-	Yes
911401524544	DN391B LED14/830 P11PSU D100 ALWP GMG2HE	-	Yes
911401524644	DN391B LED14/865 PSU D100 AL WP GCG2HE	-	Yes
911401524744	DN391B LED14/840 PSU D100 AL WP GCG2HE	-	Yes
911401524844	DN391B LED14/830 PSU D100 AL WP GCG2HE	-	Yes
911401524944	DN391B LED12/865 P10PSU D100 ALWP GMG2HE	-	Yes
911401525044	DN391B LED12/840 P10PSU D100 ALWP GMG2HE	-	Yes
911401525144	DN391B LED12/830 P10PSU D100 ALWP GMG2HE	-	Yes
911401525244	DN391B LED12/865 PSU D100 AL WP GCG2HE	-	Yes
911401525344	DN391B LED12/840 PSU D100 AL WP GCG2HE	-	Yes
911401525444	DN391B LED12/830 PSU D100 AL WP GCG2HE	-	Yes
911401525544	DN390B LED7/865 P6PSU D100 AL WP GMG2HE	-	Yes
911401525644	DN390B LED7/840 P6PSU D100 AL WP GMG2HE	-	Yes
911401525744	DN390B LED7/830 P6PSU D100 AL WP GMG2HE	-	Yes
911401525844	DN390B LED7/865 PSU D100 AL WP GCG2HE	-	Yes
911401525944	DN390B LED7/840 PSU D100 AL WP GCG2HE	-	Yes
911401526044	DN390B LED7/830 PSU D100 AL WP GCG2HE	-	Yes
911401533344	DN391B LED14/865 P11PSU D100 AL GMG2HE	-	Yes
911401533444	DN391B LED14/840 P11PSU D100 AL GMG2HE	-	Yes
911401533544	DN391B LED14/830 P11PSU D100 AL GMG2HE	-	Yes
911401533944	DN391B LED14/865 PSU D100 AL GCG2HE	-	Yes
911401534044	DN391B LED14/840 PSU D100 AL GCG2HE	-	Yes

Order Code	Full Product Name	Number of gear units	Driver included
911401534144	DN391B LED14/830 PSU D100 AL GCG2HE	-	Yes
911401534544	DN391B LED12/865 P10PSU D100 AL GMG2HE	-	Yes
911401534644	DN391B LED12/840 P10PSU D100 AL GMG2HE	-	Yes
911401534744	DN391B LED12/830 P10PSU D100 AL GMG2HE	-	Yes
911401535144	DN391B LED12/865 PSU D100 AL GCG2HE	-	Yes
911401535244	DN391B LED12/840 PSU D100 AL GCG2HE	-	Yes
911401535444	DN391B LED12/830 PSU D100 AL GCG2HE	-	Yes
911401535844	DN390B LED7/865 P6PSU D100 AL GMG2HE	-	Yes
911401535944	DN390B LED7/840 P6PSU D100 AL GMG2HE	-	Yes
911401536044	DN390B LED7/830 P6PSU D100 AL GMG2HE	-	Yes
911401536444	DN390B LED7/865 PSU D100 AL GCG2HE	-	Yes
911401536544	DN390B LED7/840 PSU D100 AL GCG2HE	-	Yes
911401536644	DN390B LED7/830 PSU D100 AL GCG2HE	-	Yes
911401537444	DN391X LED14/865 P12WIA D100 AL G2HE	-	Yes
911401538044	DN391X LED14/830 P12WIA D100 AL G2HE	-	Yes
911401538644	DN391X LED14/840 P12WIA D100 AL G2HE	-	Yes
911401570144	DN391B LED14/865 P12PSD D100 ALWP GMG2HE	-	No
911401570244	DN391B LED14/840 P12PSD D100 ALWP GMG2HE	-	No
911401570344	DN391B LED14/830 P12PSD D100 ALWP GMG2HE	-	No
911401570444	DN391B LED14/865 PSD D100 AL WP GCG2HE	-	No
911401570544	DN391B LED14/840 PSD D100 AL WP GCG2HE	-	No
911401570644	DN391B LED14/830 PSD D100 AL WP GCG2HE	-	No
911401570744	DN391B LED12/865 P10PSD D100 ALWP GMG2HE	-	No
911401570844	DN391B LED12/840 P10PSD D100 ALWP GMG2HE	-	No
911401570944	DN391B LED12/830 P10PSD D100 ALWP GMG2HE	-	No
911401571044	DN391B LED12/865 PSD D100 AL WP GCG2HE	-	No
911401571144	DN391B LED12/840 PSD D100 AL WP GCG2HE	-	No
911401571244	DN391B LED12/830 PSD D100 AL WP GCG2HE	-	No
911401577944	DN391B LED14/865 P12PSD D100 AL GMG2HE	-	No
911401578044	DN391B LED14/840 P12PSD D100 AL GMG2HE	-	No
911401578144	DN391B LED14/830 P12PSD D100 AL GMG2HE	-	No
911401578544	DN391B LED14/865 PSD D100 AL GCG2HE	-	No
911401578644	DN391B LED14/840 PSD D100 AL GCG2HE	-	No
911401578744	DN391B LED14/830 PSD D100 AL GCG2HE	-	No
911401579144	DN391B LED12/865 P10PSD D100 AL GMG2HE	-	No
911401579244	DN391B LED12/840 P10PSD D100 AL GMG2HE	-	No
911401579344	DN391B LED12/830 P10PSD D100 AL GMG2HE	-	No
911401579744	DN391B LED12/865 PSD D100 AL GCG2HE	-	No
911401579944	DN391B LED12/830 PSD D100 AL GCG2HE	-	No
911401503845	DN394X LED34/9TNW P27PSD D200 WH WP G2	1 unit	Yes
911401504145	DN394X LED34/9TNW P27PSD D200 WH WPCAUG2	1 unit	Yes
911401519944	DN393B LED26/840 P20PSU D200WHWP CAUG2HE	-	Yes

Order Code	Full Product Name	Number of gear units	Driver included
911401520344	DN393B LED26/840 P20PSU D200 WH CAUG2HE	-	Yes
911401526444	DN394B LED40/865 P29PSU D200 WH GMG2HE	-	Yes
911401526544	DN394B LED40/840 P29PSU D200 WH GMG2HE	-	Yes
911401526644	DN394B LED40/830 P29PSU D200 WH GMG2HE	-	Yes
911401527044	DN394B LED40/865 PSU D200 WH GCG2HE	-	Yes
911401527144	DN394B LED40/840 PSU D200 WH GCG2HE	-	Yes
911401527244	DN394B LED40/830 PSU D200 WH GCG2HE	-	Yes
911401527644	DN393B LED26/865 P19PSU D200 WH GMG2HE	-	Yes
911401527744	DN393B LED26/840 P19PSU D200 WH GMG2HE	-	Yes
911401527844	DN393B LED26/830 P19PSU D200 WH GMG2HE	-	Yes
911401528244	DN393B LED26/865 PSU D200 WH GCG2HE	-	Yes
911401528344	DN393B LED26/840 PSU D200 WH GCG2HE	-	Yes
911401528444	DN393B LED26/830 PSU D200 WH GCG2HE	-	Yes
911401530044	DN392B LED20/865 P14PSU D200 WH GMG2HE	-	Yes
911401530144	DN392B LED20/840 P14PSU D200 WH GMG2HE	-	Yes
911401530244	DN392B LED20/830 P14PSU D200 WH GMG2HE	-	Yes
911401530644	DN392B LED20/865 PSU D200 WH GCG2HE	-	Yes
911401530744	DN392B LED20/840 PSU D200 WH GCG2HE	-	Yes
911401530844	DN392B LED20/830 PSU D200 WH GCG2HE	-	Yes
911401537144	DN393X LED26/865 P20WIA D200 WH G2HE	-	Yes
911401537744	DN393X LED26/830 P20WIA D200 WH G2HE	-	Yes
911401538344	DN393X LED26/840 P20WIA D200 WH G2HE	-	Yes
911401571644	DN394B LED40/865 P29PSD D200 WH GMG2HE	-	No
911401571744	DN394B LED40/840 P29PSD D200 WH GMG2HE	-	No
911401571844	DN394B LED40/830 P29PSD D200 WH GMG2HE	-	No
911401572244	DN394B LED40/865 PSD D200 WH GCG2HE	-	No
911401572344	DN394B LED40/840 PSD D200 WH GCG2HE	-	No
911401572444	DN394B LED40/830 PSD D200 WH GCG2HE	-	No
911401572844	DN393B LED26/865 P20PSD D200 WH GMG2HE	-	No
911401572944	DN393B LED26/840 P20PSD D200 WH GMG2HE	-	No
911401573044	DN393B LED26/830 P20PSD D200 WH GMG2HE	-	No
911401573444	DN393B LED26/865 PSD D200 WH GCG2HE	-	No
911401573544	DN393B LED26/840 PSD D200 WH GCG2HE	-	No
911401573644	DN393B LED26/830 PSD D200 WH GCG2HE	-	No
911401575244	DN392B LED18/865 P14PSD D200 WH GMG2HE	-	No
911401575344	DN392B LED18/840 P14PSD D200 WH GMG2HE	-	No
911401575444	DN392B LED18/830 P14PSD D200 WH GMG2HE	-	No
911401575844	DN392B LED18/865 PSD D200 WH GCG2HE	-	No
911401575944	DN392B LED18/840 PSD D200 WH GCG2HE	-	No
911401576044	DN392B LED18/830 PSD D200 WH GCG2HE	-	No
911401586932	DN393B LED22/840 P20PSU D200 WH CAUG2	-	Yes
911401588632	DN393B LED22/840 P20PSU D200 WH WP CAUG2	-	Yes

Order Code	Full Product Name	Number of gear units	Driver included
911401539144	DN394X LED40/840 L1W D200 WH GCG2HE	-	No
911401539344	DN393X LED26/840 L1W D200 WH GCG2HE	-	No
911401540144	DN394X LED40/840 P29L1W D200 WH GMG2HE	-	No
911401540344	DN393X LED26/840 P20L1W D200 WH GMG2HE	-	No
911401503545	DN394X LED33/9TNW P27PSD D200 AL WP G2	1 unit	Yes
911401520744	DN394B LED38/865 P29PSU D200 ALWP GMG2HE	-	Yes
911401520844	DN394B LED38/840 P29PSU D200 ALWP GMG2HE	-	Yes
911401520944	DN394B LED38/830 P29PSU D200 ALWP GMG2HE	-	Yes
911401521044	DN394B LED38/865 PSU D200 AL WP GCG2HE	-	Yes
911401521144	DN394B LED38/840 PSU D200 AL WP GCG2HE	-	Yes
911401521244	DN394B LED38/830 PSU D200 AL WP GCG2HE	-	Yes
911401521344	DN393B LED25/865 P19PSU D200 ALWP GMG2HE	-	Yes
911401521444	DN393B LED25/840 P19PSU D200 ALWP GMG2HE	-	Yes
911401521544	DN393B LED25/830 P19PSU D200 ALWP GMG2HE	-	Yes
911401521644	DN393B LED25/865 PSU D200 AL WP GCG2HE	-	Yes
911401521744	DN393B LED25/840 PSU D200 AL WP GCG2HE	-	Yes
911401521844	DN393B LED25/830 PSU D200 AL WP GCG2HE	-	Yes
911401522544	DN392B LED18/865 P14PSU D200 ALWP GMG2HE	-	Yes
911401522644	DN392B LED18/840 P14PSU D200 ALWP GMG2HE	-	Yes
911401522744	DN392B LED18/830 P14PSU D200 ALWP GMG2HE	-	Yes
911401522844	DN392B LED18/865 PSU D200 AL WP GCG2HE	-	Yes
911401522944	DN392B LED18/840 PSU D200 AL WP GCG2HE	-	Yes
911401523044	DN392B LED18/830 PSU D200 AL WP GCG2HE	-	Yes
911401526144	DN394B LED38/865 P29PSU D200 AL GMG2HE	-	Yes
911401526244	DN394B LED38/840 P29PSU D200 AL GMG2HE	-	Yes
911401526344	DN394B LED38/830 P29PSU D200 AL GMG2HE	-	Yes
911401526744	DN394B LED38/865 PSU D200 AL GCG2HE	-	Yes
911401526844	DN394B LED38/840 PSU D200 AL GCG2HE	-	Yes
911401526944	DN394B LED38/830 PSU D200 AL GCG2HE	-	Yes
911401527344	DN393B LED25/865 P19PSU D200 AL GMG2HE	-	Yes
911401527444	DN393B LED25/840 P19PSU D200 AL GMG2HE	-	Yes
911401527544	DN393B LED25/830 P19PSU D200 AL GMG2HE	-	Yes
911401527944	DN393B LED25/865 PSU D200 AL GCG2HE	-	Yes
911401528044	DN393B LED25/840 PSU D200 AL GCG2HE	-	Yes
911401528144	DN393B LED25/830 PSU D200 AL GCG2HE	-	Yes
911401529744	DN392B LED18/865 P14PSU D200 AL GMG2HE	-	Yes
911401529844	DN392B LED18/840 P14PSU D200 AL GMG2HE	-	Yes
911401529944	DN392B LED18/830 P14PSU D200 AL GMG2HE	-	Yes
911401530344	DN392B LED18/865 PSU D200 AL GCG2HE	-	Yes
911401530444	DN392B LED18/840 PSU D200 AL GCG2HE	-	Yes
911401530544	DN392B LED18/830 PSU D200 AL GCG2HE	-	Yes
911401537044	DN393X LED25/865 P20WIA D200 AL G2HE	-	Yes

Order Code	Full Product Name	Number of gear units	Driver included
911401537644	DN393X LED25/830 P20WIA D200 AL G2HE	-	Yes
911401538244	DN393X LED25/840 P20WIA D200 AL G2HE	-	Yes
911401566844	DN394B LED38/865 P29PSD D200 ALWP GMG2HE	-	No
911401566944	DN394B LED38/840 P29PSD D200 ALWP GMG2HE	-	No
911401567044	DN394B LED38/830 P29PSD D200 ALWP GMG2HE	-	No
911401567144	DN394B LED38/865 PSD D200 AL WP GCG2HE	-	No
911401567244	DN394B LED38/840 PSD D200 AL WP GCG2HE	-	No
911401567344	DN394B LED38/830 PSD D200 AL WP GCG2HE	-	No
911401567444	DN393B LED25/865 P20PSD D200 ALWP GMG2HE	-	No
911401567544	DN393B LED25/840 P20PSD D200 ALWP GMG2HE	-	No
911401567644	DN393B LED25/830 P20PSD D200 ALWP GMG2HE	-	No
911401567744	DN393B LED25/865 PSD D200 AL WP GCG2HE	-	No
911401567844	DN393B LED25/840 PSD D200 AL WP GCG2HE	-	No
911401567944	DN393B LED25/830 PSD D200 AL WP GCG2HE	-	No
911401568644	DN392B LED18/865 P14PSD D200 ALWP GMG2HE	-	No
911401568744	DN392B LED18/840 P14PSD D200 ALWP GMG2HE	-	No
911401568844	DN392B LED18/830 P14PSD D200 ALWP GMG2HE	-	No
911401568944	DN392B LED18/865 PSD D200 AL WP GCG2HE	-	No
911401569044	DN392B LED18/840 PSD D200 AL WP GCG2HE	-	No
911401569144	DN392B LED18/830 PSD D200 AL WP GCG2HE	-	No
911401571344	DN394B LED38/865 P29PSD D200 AL GMG2HE	-	No
911401571444	DN394B LED38/840 P29PSD D200 AL GMG2HE	-	No
911401571544	DN394B LED38/830 P29PSD D200 AL GMG2HE	-	No
911401571944	DN394B LED38/865 PSD D200 AL GCG2HE	-	No
911401572044	DN394B LED38/840 PSD D200 AL GCG2HE	-	No
911401572144	DN394B LED38/830 PSD D200 AL GCG2HE	-	No
911401572544	DN393B LED25/865 P20PSD D200 AL GMG2HE	-	No
911401572644	DN393B LED25/840 P20PSD D200 AL GMG2HE	-	No
911401572744	DN393B LED25/830 P20PSD D200 AL GMG2HE	-	No
911401573144	DN393B LED25/865 PSD D200 AL GCG2HE	-	No
911401573244	DN393B LED25/840 PSD D200 AL GCG2HE	-	No
911401573344	DN393B LED25/830 PSD D200 AL GCG2HE	-	No
911401574944	DN392B LED18/865 P14PSD D200 AL GMG2HE	-	No
911401575044	DN392B LED18/840 P14PSD D200 AL GMG2HE	-	No
911401575144	DN392B LED18/830 P14PSD D200 AL GMG2HE	-	No
911401575544	DN392B LED18/865 PSD D200 AL GCG2HE	-	No
911401575644	DN392B LED18/840 PSD D200 AL GCG2HE	-	No
911401575744	DN392B LED18/830 PSD D200 AL GCG2HE	-	No
911401577042	DN393X LED22/840 P20L1W D200 WH CAUG2	-	Yes
911401577542	DN392X LED17/840 P15L1W D150 WH CAUG2	-	Yes
911401538844	DN392X LED20/840 L1W D150 WH GCG2HE	-	No
911401539544	DN392X LED22/840 L1W D150 WH GCG2HE	-	No

Order Code	Full Product Name	Number of gear units	Driver included
911401539944	DN392X LED20/840 P15L1W D150 WH GMG2HE	-	No
911401540544	DN392X LED22/840 P17L1W D150 WH GMG2HE	-	No
911401503945	DN392X LED17/9TNW P15PSD D150 WH WP G2	1 unit	Yes
911401504245	DN392X LED17/9TNW P15PSD D150 WH WPCAUG2	1 unit	Yes
911401520044	DN392B LED20/840 P15PSU D150WHWP CAUG2HE	-	Yes
911401520144	DN391B LED13/840 P11PSU D150WHWP CAUG2HE	-	Yes
911401520444	DN392B LED20/840 P15PSU D150 WH CAUG2HE	-	Yes
911401520544	DN391B LED13/840 P11PSU D150 WH CAUG2HE	-	Yes
911401528844	DN392B LED22/865 P16PSU D150 WH GMG2HE	-	Yes
911401528944	DN392B LED22/840 P16PSU D150 WH GMG2HE	-	Yes
911401529044	DN392B LED22/830 P16PSU D150 WH GMG2HE	-	Yes
911401529444	DN392B LED22/865 PSU D150 WH GCG2HE	-	Yes
911401529544	DN392B LED22/840 PSU D150 WH GCG2HE	-	Yes
911401529644	DN392B LED22/830 PSU D150 WH GCG2HE	-	Yes
911401531244	DN392B LED20/865 P14PSU D150 WH GMG2HE	-	Yes
911401531344	DN392B LED20/840 P14PSU D150 WH GMG2HE	-	Yes
911401531444	DN392B LED20/830 P14PSU D150 WH GMG2HE	-	Yes
911401531844	DN392B LED20/865 PSU D150 WH GCG2HE	-	Yes
911401531944	DN392B LED20/840 PSU D150 WH GCG2HE	-	Yes
911401532044	DN392B LED20/830 PSU D150 WH GCG2HE	-	Yes
911401532444	DN391B LED13/865 P10PSU D150 WH GMG2HE	-	Yes
911401532544	DN391B LED13/840 P10PSU D150 WH GMG2HE	-	Yes
911401532644	DN391B LED13/830 P10PSU D150 WH GMG2HE	-	Yes
911401533044	DN391B LED13/865 PSU D150 WH GCG2HE	-	Yes
911401533144	DN391B LED13/840 PSU D150 WH GCG2HE	-	Yes
911401533244	DN391B LED13/830 PSU D150 WH GCG2HE	-	Yes
911401537344	DN392X LED20/865 P15WIA D150 WH G2HE	-	Yes
911401537944	DN392X LED20/830 P15WIA D150 WH G2HE	-	Yes
911401538544	DN392X LED20/840 P15WIA D150 WH G2HE	-	Yes
911401566544	DN392B LED19/865 P14PSD D150 WH GMG2HE	-	No
911401566644	DN392B LED19/840 P14PSD D150 WH GMG2HE	-	No
911401566744	DN392B LED19/830 P14PSD D150 WH GMG2HE	-	No
911401574044	DN392B LED23/865 P17PSD D150 WH GMG2HE	-	No
911401574144	DN392B LED23/840 P17PSD D150 WH GMG2HE	-	No
911401574244	DN392B LED23/830 P17PSD D150 WH GMG2HE	-	No
911401574644	DN392B LED23/865 PSD D150 WH GCG2HE	-	No
911401574744	DN392B LED23/840 PSD D150 WH GCG2HE	-	No
911401574844	DN392B LED23/830 PSD D150 WH GCG2HE	-	No
911401576444	DN392B LED19/865 PSD D150 WH GCG2HE	-	No
911401576544	DN392B LED19/840 PSD D150 WH GCG2HE	-	No
911401576644	DN392B LED19/830 PSD D150 WH GCG2HE	-	No
911401577044	DN391B LED13/865 P11PSD D150 WH GMG2HE	-	No

Order Code	Full Product Name	Number of gear units	Driver included
911401577144	DN391B LED13/840 P11PSD D150 WH GMG2HE	-	No
911401577244	DN391B LED13/830 P11PSD D150 WH GMG2HE	-	No
911401577644	DN391B LED13/865 PSD D150 WH GCG2HE	-	No
911401577744	DN391B LED13/840 PSD D150 WH GCG2HE	-	No
911401577844	DN391B LED13/830 PSD D150 WH GCG2HE	-	No
911401585532	DN391B LED11/840 P11PSU D150 WH CAUG2	-	Yes
911401587832	DN391B LED11/840 P11PSU D150 WH WP CAUG2	-	Yes
911401587932	DN392B LED17/840 P15PSU D150 WH WP CAUG2	-	Yes
911401538944	DN392X LED18/840 L1W D150 AL GCG2HE	-	No
911401539444	DN392X LED20/840 L1W D150 AL GCG2HE	-	No
911401539844	DN392X LED18/840 P15L1W D150 AL GMG2HE	-	No
911401540444	DN392X LED20/840 P17L1W D150 AL GMG2HE	-	No

Light Technical

Order Code	Full Product Name	Luminous Flux	Correlated Color Temperature (Nom)	Luminous Efficacy (rated) (Nom)	Color rendering index (CRI)	Number of light sources	Beam angle of light source	Optic type
911401539044	DN394X LED38/840 L1W D200 AL GCG2HE	3,800 lm	4000 K	125 lm/W	>80	78	10 or 40 degree(s)	White reflector and opal cover
911401539244	DN393X LED25/840 L1W D200 AL GCG2HE	2,500 lm	4000 K	125 lm/W	>80	48	10 or 40 degree(s)	White reflector and opal cover
911401540044	DN394X LED38/840 P29L1W D200 AL GMG2HE	3,800 lm	4000 K	125 lm/W	>80	78	10 or 40 degree(s)	White reflector and opal cover
911401540244	DN393X LED25/840 P20L1W D200 AL GMG2HE	2,500 lm	4000 K	125 lm/W	>80	48	10 or 40 degree(s)	White reflector and opal cover
911401504045	DN391X LED8/9TNW P7PSD D100 WH WP G2	800 lm	Tunable white 2700-6500 K	115 lm/W	≥90	20	- degree(s)	White reflector and opal cover
911401504345	DN391X LED8/9TNW P7PSD D100 WH WPCAUG2	800 lm	Tunable white 2700-6500 K	115 lm/W	≥90	20	- degree(s)	White reflector and opal cover
911401520244	DN390B LED7/840 P6PSU D100WHWP CAUG2HE	750 lm	4000 K	130 lm/W	>80	1	-	Facetted reflector
911401520644	DN390B LED7/840 P6PSU D100 WH CAUG2HE	750 lm	4000 K	130 lm/W	>80	1	-	White reflector and opal cover
911401533644	DN391B LED15/865 P11PSU D100 WH GMG2HE	1,500 lm	6500 K	130 lm/W	>80	1	-	White reflector and opal cover
911401533744	DN391B LED15/840 P11PSU D100 WH GMG2HE	1,500 lm	4000 K	130 lm/W	>80	1	-	White reflector and opal cover
911401533844	DN391B LED15/830 P11PSU D100 WH GMG2HE	1,350 lm	3000 K	120 lm/W	>80	1	-	White reflector and opal cover
911401534244	DN391B LED15/865 PSU D100 WH GCG2HE	1,500 lm	6500 K	130 lm/W	>80	1	-	White reflector and opal cover
911401534344	DN391B LED15/840 PSU D100 WH GCG2HE	1,500 lm	4000 K	130 lm/W	>80	1	-	White reflector and opal cover
911401534444	DN391B LED15/830 PSU D100 WH GCG2HE	1,350 lm	3000 K	120 lm/W	>80	1	-	White reflector and opal cover
911401534844	DN391B LED12/865 P10PSU D100 WH GMG2HE	1,250 lm	6500 K	130 lm/W	>80	1	-	White reflector and opal cover

Order Code	Full Product Name	Luminous Flux	Correlated Color Temperature (Nom)	Luminous Efficacy (rated) (Nom)	Color rendering index (CRI)	Number of light sources	Beam angle of light source	Optic type
911401534944	DN391B LED12/840 P10PSU D100 WH GMG2HE	1,250 lm	4000 K	130 lm/W	>80	1	-	White reflector and opal cover
911401535044	DN391B LED12/830 P10PSU D100 WH GMG2HE	1,150 lm	3000 K	120 lm/W	>80	1	-	White reflector and opal cover
911401535544	DN391B LED12/865 PSU D100 WH GCG2HE	1,250 lm	6500 K	130 lm/W	>80	1	-	White reflector and opal cover
911401535644	DN391B LED12/840 PSU D100 WH GCG2HE	1,250 lm	4000 K	130 lm/W	>80	1	-	White reflector and opal cover
911401535744	DN391B LED12/830 PSU D100 WH GCG2HE	1,150 lm	3000 K	120 lm/W	>80	1	-	White reflector and opal cover
911401536144	DN390B LED7/865 P6PSU D100 WH GMG2HE	750 lm	6500 K	130 lm/W	>80	1	-	White reflector and opal cover
911401536244	DN390B LED7/840 P6PSU D100 WH GMG2HE	750 lm	4000 K	130 lm/W	>80	1	-	White reflector and opal cover
911401536344	DN390B LED7/830 P6PSU D100 WH GMG2HE	700 lm	3000 K	120 lm/W	>80	1	-	White reflector and opal cover
911401536744	DN390B LED7/865 PSU D100 WH GCG2HE	750 lm	6500 K	130 lm/W	>80	1	-	White reflector and opal cover
911401536844	DN390B LED7/840 PSU D100 WH GCG2HE	750 lm	4000 K	130 lm/W	>80	1	-	White reflector and opal cover
911401536944	DN390B LED7/830 PSU D100 WH GCG2HE	700 lm	3000 K	120 lm/W	>80	1	-	White reflector and opal cover
911401537544	DN391X LED15/865 P12WIA D100 WH G2HE	1,500 lm	6500 K	125 lm/W	>80	1	-	White reflector and opal cover
911401538144	DN391X LED15/830 P12WIA D100 WH G2HE	1,500 lm	3000 K	116 lm/W	>80	1	-	White reflector and opal cover
911401538744	DN391X LED15/840 P12WIA D100WH G2HE	1,500 lm	4000 K	125 lm/W	>80	1	-	White reflector and opal cover
911401578244	DN391B LED15/865 P12PSD D100 WH GMG2HE	1,500 lm	6500 K	125 lm/W	>80	28	10 or 40 degree(s)	White reflector and opal cover
911401578344	DN391B LED15/840 P12PSD D100 WH GMG2HE	1,500 lm	4000 K	125 lm/W	>80	28	10 or 40 degree(s)	White reflector and opal cover
911401578444	DN391B LED15/830 P12PSD D100 WH GMG2HE	1,350 lm	3000 K	116 lm/W	>80	28	10 or 40 degree(s)	White reflector and opal cover
911401578844	DN391B LED15/865 PSD D100 WH GCG2HE	1,500 lm	6500 K	125 lm/W	>80	28	10 or 40 degree(s)	White reflector and opal cover
911401578944	DN391B LED15/840 PSD D100 WH GCG2HE	1,500 lm	4000 K	125 lm/W	>80	28	10 or 40 degree(s)	White reflector and opal cover
911401579044	DN391B LED15/830 PSD D100 WH GCG2HE	1,350 lm	3000 K	116 lm/W	>80	28	10 or 40 degree(s)	White reflector and opal cover
911401579444	DN391B LED12/865 P10PSD D100 WH GMG2HE	1,200 lm	6500 K	125 lm/W	>80	28	10 or 40 degree(s)	White reflector and opal cover
911401579544	DN391B LED12/840 P10PSD D100 WH GMG2HE	1,200 lm	4000 K	125 lm/W	>80	28	10 or 40 degree(s)	White reflector and opal cover
911401579644	DN391B LED12/830 P10PSD D100 WH GMG2HE	1,100 lm	3000 K	116 lm/W	>80	28	10 or 40 degree(s)	White reflector and opal cover
911401580044	DN391B LED12/865 PSD D100 WH GCG2HE	1,200 lm	6500 K	125 lm/W	>80	28	10 or 40 degree(s)	White reflector and opal cover
911401580144	DN391B LED12/840 PSD D100 WH GCG2HE	1,200 lm	4000 K	125 lm/W	>80	28	10 or 40 degree(s)	White reflector and opal cover
911401580244	DN391B LED12/830 PSD D100 WH GCG2HE	1,100 lm	3000 K	116 lm/W	>80	28	10 or 40 degree(s)	White reflector and opal cover

Order Code	Full Product Name	Luminous Flux	Correlated Color Temperature (Nom)	Luminous Efficacy (rated) (Nom)	Color rendering index (CRI)	Number of light sources	Beam angle of light source	Optic type
911401539644	DN391X LED14/840 L1W D100 AL GCG2HE	1,400 lm	4000 K	115 lm/W	>80	28	10 or 40 degree(s)	White reflector and opal cover
911401540644	DN391X LED14/840 P11L1W D100 AL GMG2HE	1,400 lm	4000 K	115 lm/W	>80	28	10 or 40 degree(s)	White reflector and opal cover
911401503645	DN392X LED16/9TNW P15PSD D150 AL WP G2	1,650 lm	Tunable white 2700-6500 K	115 lm/W	≥90	48	- degree(s)	Facetted reflector
911401521944	DN392B LED20/865 P16PSU D150 ALWP GMG2HE	2,000 lm	6500 K	132 lm/W	>80	1	-	Facetted reflector
911401522044	DN392B LED20/840 P16PSU D150 ALWP GMG2HE	2,000 lm	4000 K	132 lm/W	>80	1	-	Facetted reflector
911401522144	DN392B LED20/830 P16PSU D150 ALWP GMG2HE	1,850 lm	3000 K	122 lm/W	>80	1	-	Facetted reflector
911401522244	DN392B LED20/865 PSU D150 AL WP GCG2HE	2,000 lm	6500 K	132 lm/W	>80	1	-	Facetted reflector
911401522344	DN392B LED20/840 PSU D150 AL WP GCG2HE	2,000 lm	4000 K	132 lm/W	>80	1	-	Facetted reflector
911401522444	DN392B LED20/830 PSU D150 AL WP GCG2HE	1,850 lm	3000 K	122 lm/W	>80	1	-	Facetted reflector
911401523144	DN392B LED18/865 P14PSU D150 ALWP GMG2HE	1,850 lm	6500 K	132 lm/W	>80	1	-	Facetted reflector
911401523244	DN392B LED18/840 P14PSU D150 ALWP GMG2HE	1,850 lm	4000 K	132 lm/W	>80	1	-	Facetted reflector
911401523344	DN392B LED18/830 P14PSU D150 ALWP GMG2HE	1,700 lm	3000 K	122 lm/W	>80	1	-	Facetted reflector
911401523444	DN392B LED18/865 PSU D150 AL WP GCG2HE	1,850 lm	6500 K	132 lm/W	>80	1	-	Facetted reflector
911401523544	DN392B LED18/840 PSU D150 AL WP GCG2HE	1,850 lm	4000 K	132 lm/W	>80	1	-	Facetted reflector
911401523644	DN392B LED18/830 PSU D150 AL WP GCG2HE	1,700 lm	3000 K	122 lm/W	>80	1	-	Facetted reflector
911401523744	DN391B LED12/865 P10PSU D150 ALWP GMG2HE	1,250 lm	6500 K	132 lm/W	>80	1	-	Facetted reflector
911401523844	DN391B LED12/840 P10PSU D150 ALWP GMG2HE	1,250 lm	4000 K	132 lm/W	>80	1	-	Facetted reflector
911401523944	DN391B LED12/830 P10PSU D150 ALWP GMG2HE	1,150 lm	3000 K	122 lm/W	>80	1	-	Facetted reflector
911401524044	DN391B LED12/865 PSU D150 AL WP GCG2HE	1,250 lm	6500 K	132 lm/W	>80	1	-	Facetted reflector
911401524144	DN391B LED12/840 PSU D150 AL WP GCG2HE	1,250 lm	4000 K	132 lm/W	>80	1	-	Facetted reflector
911401524244	DN391B LED12/830 PSU D150 AL WP GCG2HE	1,150 lm	3000 K	122 lm/W	>80	1	-	Facetted reflector
911401528544	DN392B LED20/865 P16PSU D150 AL GMG2HE	2,000 lm	6500 K	132 lm/W	>80	1	-	Facetted reflector
911401528644	DN392B LED20/840 P16PSU D150 AL GMG2HE	2,000 lm	4000 K	132 lm/W	>80	1	-	Facetted reflector
911401528744	DN392B LED20/830 P16PSU D150 AL GMG2HE	1,850 lm	3000 K	122 lm/W	>80	1	-	Facetted reflector

Order Code	Full Product Name	Luminous Flux	Correlated Color Temperature (Nom)	Luminous Efficacy (rated) (Nom)	Color rendering index (CRI)	Number of light sources	Beam angle of light source	Optic type
911401529144	DN392B LED20/865 PSU D150 AL GCG2HE	2,000 lm	6500 K	132 lm/W	>80	1	-	Facetted reflector
911401529244	DN392B LED20/840 PSU D150 AL GCG2HE	2,000 lm	4000 K	132 lm/W	>80	1	-	Facetted reflector
911401529344	DN392B LED20/830 PSU D150 AL GCG2HE	1,850 lm	3000 K	122 lm/W	>80	1	-	Facetted reflector
911401530944	DN392B LED18/865 P14PSU D150 AL GMG2HE	1,850 lm	6500 K	132 lm/W	>80	1	-	Facetted reflector
911401531044	DN392B LED18/840 P14PSU D150 AL GMG2HE	1,850 lm	4000 K	132 lm/W	>80	1	-	Facetted reflector
911401531144	DN392B LED18/830 P14PSU D150 AL GMG2HE	1,700 lm	3000 K	122 lm/W	>80	1	-	Facetted reflector
911401531544	DN392B LED18/865 PSU D150 AL GCG2HE	1,850 lm	6500 K	132 lm/W	>80	1	-	Facetted reflector
911401531644	DN392B LED18/840 PSU D150 AL GCG2HE	1,850 lm	4000 K	132 lm/W	>80	1	-	Facetted reflector
911401531744	DN392B LED18/830 PSU D150 AL GCG2HE	1,700 lm	3000 K	122 lm/W	>80	1	-	Facetted reflector
911401532144	DN391B LED12/865 P10PSU D150 AL GMG2HE	1,250 lm	6500 K	132 lm/W	>80	1	-	Facetted reflector
911401532244	DN391B LED12/840 P10PSU D150 AL GMG2HE	1,250 lm	4000 K	132 lm/W	>80	1	-	Facetted reflector
911401532344	DN391B LED12/830 P10PSU D150 AL GMG2HE	1,150 lm	3000 K	122 lm/W	>80	1	-	Facetted reflector
911401532744	DN391B LED12/865 PSU D150 AL GCG2HE	1,250 lm	6500 K	132 lm/W	>80	1	-	Facetted reflector
911401532844	DN391B LED12/840 PSU D150 AL GCG2HE	1,250 lm	4000 K	132 lm/W	>80	1	-	Facetted reflector
911401532944	DN391B LED13/830 PSU D150 AL GCG2HE	1,150 lm	3000 K	122 lm/W	>80	1	-	Facetted reflector
911401537244	DN392X LED18/865 P15WIA D150 AL G2HE	1,850 lm	6500 K	130 lm/W	>80	1	-	Facetted reflector
911401537844	DN392X LED18/830 P15WIA D150 AL G2HE	1,700 lm	3000 K	120 lm/W	>80	1	-	Facetted reflector
911401538444	DN392X LED18/840 P15WIA D150 AL G2HE	1,850 lm	4000 K	130 lm/W	>80	1	-	Facetted reflector
911401565944	DN392B LED18/865 P14PSD D150 ALWP GMG2HE	1,800 lm	6500 K	130 lm/W	>80	48	10 or 40 degree(s)	Facetted reflector
911401566044	DN392B LED18/840 P14PSD D150 ALWP GMG2HE	1,800 lm	4000 K	130 lm/W	>80	48	10 or 40 degree(s)	Facetted reflector
911401566144	DN392B LED18/830 P14PSD D150 ALWP GMG2HE	1,650 lm	3000 K	120 lm/W	>80	48	10 or 40 degree(s)	Facetted reflector
911401566244	DN392B LED18/865 P14PSD D150 AL GMG2HE	1,800 lm	6500 K	130 lm/W	>80	48	10 or 40 degree(s)	Facetted reflector
911401566344	DN392B LED18/840 P14PSD D150 AL GMG2HE	1,800 lm	4000 K	130 lm/W	>80	48	10 or 40 degree(s)	Facetted reflector
911401566444	DN392B LED18/830 P14PSD D150 AL GMG2HE	1,650 lm	3000 K	120 lm/W	>80	48	10 or 40 degree(s)	Facetted reflector
911401568044	DN392B LED22/865 P17PSD D150 ALWP GMG2HE	2,200 lm	6500 K	130 lm/W	>80	48	10 or 40 degree(s)	Facetted reflector
911401568144	DN392B LED22/840 P17PSD D150 ALWP GMG2HE	2,200 lm	4000 K	130 lm/W	>80	48	10 or 40 degree(s)	Facetted reflector

Order Code	Full Product Name	Luminous Flux	Correlated Color Temperature (Nom)	Luminous Efficacy (rated) (Nom)	Color rendering index (CRI)	Number of light sources	Beam angle of light source	Optic type
911401568244	DN392B LED22/830 P17PSD D150 ALWP GMG2HE	2,000 lm	3000 K	120 lm/W	>80	48	10 or 40 degree(s)	Facetted reflector
911401568344	DN392B LED22/865 PSD D150 AL WP GCG2HE	2,200 lm	6500 K	130 lm/W	>80	48	10 or 40 degree(s)	Facetted reflector
911401568444	DN392B LED22/840 PSD D150 AL WP GCG2HE	2,200 lm	4000 K	130 lm/W	>80	48	10 or 40 degree(s)	Facetted reflector
911401568544	DN392B LED22/830 PSD D150 AL WP GCG2HE	2,000 lm	3000 K	120 lm/W	>80	48	10 or 40 degree(s)	Facetted reflector
911401569244	DN392B LED18/865 PSD D150 AL WP GCG2HE	1,800 lm	6500 K	130 lm/W	>80	48	10 or 40 degree(s)	Facetted reflector
911401569344	DN392B LED18/840 PSD D150 AL WP GCG2HE	1,800 lm	4000 K	130 lm/W	>80	48	10 or 40 degree(s)	Facetted reflector
911401569444	DN392B LED18/830 PSD D150 AL WP GCG2HE	1,650 lm	3000 K	120 lm/W	>80	48	10 or 40 degree(s)	Facetted reflector
911401569544	DN391B LED12/865 P11PSD D150 ALWP GMG2HE	1,250 lm	6500 K	120 lm/W	>80	24	10 or 40 degree(s)	Facetted reflector
911401569644	DN391B LED12/840 P11PSD D150 ALWP GMG2HE	1,250 lm	4000 K	120 lm/W	>80	24	10 or 40 degree(s)	Facetted reflector
911401569744	DN391B LED12/830 P11PSD D150 ALWP GMG2HE	1,150 lm	3000 K	111 lm/W	>80	24	10 or 40 degree(s)	Facetted reflector
911401569844	DN391B LED12/865 PSD D150 AL WP GCG2HE	1,250 lm	6500 K	120 lm/W	>80	24	10 or 40 degree(s)	Facetted reflector
911401569944	DN391B LED12/840 PSD D150 AL WP GCG2HE	1,250 lm	4000 K	120 lm/W	>80	24	10 or 40 degree(s)	Facetted reflector
911401570044	DN391B LED12/830 PSD D150 AL WP GCG2HE	1,150 lm	3000 K	111 lm/W	>80	24	10 or 40 degree(s)	Facetted reflector
911401573744	DN392B LED22/865 P17PSD D150 AL GMG2HE	2,200 lm	6500 K	130 lm/W	>80	48	10 or 40 degree(s)	Facetted reflector
911401573844	DN392B LED22/840 P17PSD D150 AL GMG2HE	2,200 lm	4000 K	130 lm/W	>80	48	10 or 40 degree(s)	Facetted reflector
911401573944	DN392B LED22/830 P17PSD D150 AL GMG2HE	2,000 lm	3000 K	120 lm/W	>80	48	10 or 40 degree(s)	Facetted reflector
911401574344	DN392B LED22/865 PSD D150 AL GCG2HE	2,200 lm	6500 K	130 lm/W	>80	48	10 or 40 degree(s)	Facetted reflector
911401574444	DN392B LED22/840 PSD D150 AL GCG2HE	2,200 lm	4000 K	130 lm/W	>80	48	10 or 40 degree(s)	Facetted reflector
911401574544	DN392B LED22/830 PSD D150 AL GCG2HE	2,000 lm	3000 K	120 lm/W	>80	48	10 or 40 degree(s)	Facetted reflector
911401576144	DN392B LED18/865 PSD D150 AL GCG2HE	1,800 lm	6500 K	130 lm/W	>80	48	10 or 40 degree(s)	Facetted reflector
911401576244	DN392B LED18/840 PSD D150 AL GCG2HE	1,800 lm	4000 K	130 lm/W	>80	48	10 or 40 degree(s)	Facetted reflector
911401576344	DN392B LED18/830 PSD D150 AL GCG2HE	1,650 lm	3000 K	120 lm/W	>80	48	10 or 40 degree(s)	Facetted reflector
911401576744	DN391B LED12/865 P11PSD D150 AL GMG2HE	1,250 lm	6500 K	120 lm/W	>80	24	10 or 40 degree(s)	Facetted reflector
911401576844	DN391B LED12/840 P11PSD D150 AL GMG2HE	1,250 lm	4000 K	120 lm/W	>80	24	10 or 40 degree(s)	Facetted reflector
911401576944	DN391B LED12/830 P11PSD D150 AL GMG2HE	1,150 lm	3000 K	111 lm/W	>80	24	10 or 40 degree(s)	Facetted reflector
911401577344	DN391B LED12/865 PSD D150 AL GCG2HE	1,250 lm	6500 K	120 lm/W	>80	24	10 or 40 degree(s)	Facetted reflector

Order Code	Full Product Name	Luminous Flux	Correlated Color Temperature (Nom)	Luminous Efficacy (rated) (Nom)	Color rendering index (CRI)	Number of light sources	Beam angle of light source	Optic type
911401577444	DN391B LED12/840 PSD D150 AL GCG2HE	1,250 lm	4000 K	120 lm/W	>80	24	10 or 40 degree(s)	Facetted reflector
911401577544	DN391B LED12/830 PSD D150 AL GCG2HE	1,150 lm	3000 K	111 lm/W	>80	24	10 or 40 degree(s)	Facetted reflector
911401539744	DN391X LED15/840 L1W D100 WH GCG2HE	1,500 lm	4000 K	125 lm/W	>80	28	10 or 40 degree(s)	White reflector and opal cover
911401540744	DN391X LED15/840 P11L1W D100 WH GMG2HE	1,500 lm	4000 K	125 lm/W	>80	28	10 or 40 degree(s)	White reflector and opal cover
911401577142	DN393X LED22/840 P20L1W D200 AL CAUG2	2,250 lm	4000 K	115 lm/W	>80	1	- degree(s)	White reflector and opal cover
911401577442	DN392X LED17/840 P15L1W D150 AL CAUG2	1,650 lm	4000 K	115 lm/W	>80	1	- degree(s)	Facetted reflector
911401503745	DN391X LED7/9TNW P7PSD D100 AL WP G2	750 lm	Tunable white 2700-6500 K	110 lm/W	≥90	20	- degree(s)	Facetted reflector
911401524344	DN391B LED14/865 P11PSU D100 ALWP GMG2HE	1,400 lm	6500 K	125 lm/W	>80	1	-	Facetted reflector
911401524444	DN391B LED14/840 P11PSU D100 ALWP GMG2HE	1,400 lm	4000 K	125 lm/W	>80	1	-	Facetted reflector
911401524544	DN391B LED14/830 P11PSU D100 ALWP GMG2HE	1,300 lm	3000 K	118 lm/W	>80	1	-	Facetted reflector
911401524644	DN391B LED14/865 PSU D100 AL WP GCG2HE	1,400 lm	6500 K	125 lm/W	>80	1	-	Facetted reflector
911401524744	DN391B LED14/840 PSU D100 AL WP GCG2HE	1,400 lm	4000 K	125 lm/W	>80	1	-	Facetted reflector
911401524844	DN391B LED14/830 PSU D100 AL WP GCG2HE	1,300 lm	3000 K	118 lm/W	>80	1	-	Facetted reflector
911401524944	DN391B LED12/865 P10PSU D100 ALWP GMG2HE	1,200 lm	6500 K	125 lm/W	>80	1	-	Facetted reflector
911401525044	DN391B LED12/840 P10PSU D100 ALWP GMG2HE	1,200 lm	4000 K	125 lm/W	>80	1	-	Facetted reflector
911401525144	DN391B LED12/830 P10PSU D100 ALWP GMG2HE	1,100 lm	3000 K	118 lm/W	>80	1	-	Facetted reflector
911401525244	DN391B LED12/865 PSU D100 AL WP GCG2HE	1,200 lm	6500 K	125 lm/W	>80	1	-	Facetted reflector
911401525344	DN391B LED12/840 PSU D100 AL WP GCG2HE	1,200 lm	4000 K	125 lm/W	>80	1	-	Facetted reflector
911401525444	DN391B LED12/830 PSU D100 AL WP GCG2HE	1,100 lm	3000 K	118 lm/W	>80	1	-	Facetted reflector
911401525544	DN390B LED7/865 P6PSU D100 AL WP GMG2HE	700 lm	6500 K	125 lm/W	>80	1	-	Facetted reflector
911401525644	DN390B LED7/840 P6PSU D100 AL WP GMG2HE	700 lm	4000 K	125 lm/W	>80	1	-	Facetted reflector
911401525744	DN390B LED7/830 P6PSU D100 AL WP GMG2HE	650 lm	3000 K	118 lm/W	>80	1	-	Facetted reflector
911401525844	DN390B LED7/865 PSU D100 AL WP GCG2HE	700 lm	6500 K	125 lm/W	>80	1	-	Facetted reflector
911401525944	DN390B LED7/840 PSU D100 AL WP GCG2HE	700 lm	4000 K	125 lm/W	>80	1	-	Facetted reflector

Order Code	Full Product Name	Luminous Flux	Correlated Color Temperature (Nom)	Luminous Efficacy (rated) (Nom)	Color rendering index (CRI)	Number of light sources	Beam angle of light source	Optic type
911401526044	DN390B LED7/830 PSU D100 AL WP GCG2HE	650 lm	3000 K	118 lm/W	>80	1	-	Facetted reflector
911401533344	DN391B LED14/865 P11PSU D100 AL GMG2HE	1,400 lm	6500 K	125 lm/W	>80	1	-	Facetted reflector
911401533444	DN391B LED14/840 P11PSU D100 AL GMG2HE	1,400 lm	4000 K	125 lm/W	>80	1	-	Facetted reflector
911401533544	DN391B LED14/830 P11PSU D100 AL GMG2HE	1,300 lm	3000 K	118 lm/W	>80	1	-	Facetted reflector
911401533944	DN391B LED14/865 PSU D100 AL GCG2HE	1,400 lm	6500 K	125 lm/W	>80	1	-	Facetted reflector
911401534044	DN391B LED14/840 PSU D100 AL GCG2HE	1,400 lm	4000 K	125 lm/W	>80	1	-	Facetted reflector
911401534144	DN391B LED14/830 PSU D100 AL GCG2HE	1,300 lm	3000 K	118 lm/W	>80	1	-	Facetted reflector
911401534544	DN391B LED12/865 P10PSU D100 AL GMG2HE	1,200 lm	6500 K	125 lm/W	>80	1	-	Facetted reflector
911401534644	DN391B LED12/840 P10PSU D100 AL GMG2HE	1,200 lm	4000 K	125 lm/W	>80	1	-	Facetted reflector
911401534744	DN391B LED12/830 P10PSU D100 AL GMG2HE	1,100 lm	3000 K	118 lm/W	>80	1	-	Facetted reflector
911401535144	DN391B LED12/865 PSU D100 AL GCG2HE	1,200 lm	6500 K	125 lm/W	>80	1	-	Facetted reflector
911401535244	DN391B LED12/840 PSU D100 AL GCG2HE	1,200 lm	4000 K	125 lm/W	>80	1	-	Facetted reflector
911401535444	DN391B LED12/830 PSU D100 AL GCG2HE	1,100 lm	3000 K	118 lm/W	>80	1	-	Facetted reflector
911401535844	DN390B LED7/865 P6PSU D100 AL GMG2HE	700 lm	6500 K	125 lm/W	>80	1	-	Facetted reflector
911401535944	DN390B LED7/840 P6PSU D100 AL GMG2HE	700 lm	4000 K	125 lm/W	>80	1	-	Facetted reflector
911401536044	DN390B LED7/830 P6PSU D100 AL GMG2HE	650 lm	3000 K	118 lm/W	>80	1	-	Facetted reflector
911401536444	DN390B LED7/865 PSU D100 AL GCG2HE	700 lm	6500 K	125 lm/W	>80	1	-	Facetted reflector
911401536544	DN390B LED7/840 PSU D100 AL GCG2HE	700 lm	4000 K	125 lm/W	>80	1	-	Facetted reflector
911401536644	DN390B LED7/830 PSU D100 AL GCG2HE	650 lm	3000 K	118 lm/W	>80	1	-	Facetted reflector
911401537444	DN391X LED14/865 P12WIA D100 AL G2HE	1,400 lm	6500 K	120 lm/W	>80	1	-	Facetted reflector
911401538044	DN391X LED14/830 P12WIA D100 AL G2HE	1,400 lm	3000 K	111 lm/W	>80	1	-	Facetted reflector
911401538644	DN391X LED14/840 P12WIA D100 AL G2HE	1,400 lm	4000 K	120 lm/W	>80	1	-	Facetted reflector
911401570144	DN391B LED14/865 P12PSD D100 ALWP GMG2HE	1,400 lm	6500 K	120 lm/W	>80	28	10 or 40 degree(s)	Facetted reflector
911401570244	DN391B LED14/840 P12PSD D100 ALWP GMG2HE	1,400 lm	4000 K	120 lm/W	>80	28	10 or 40 degree(s)	Facetted reflector
911401570344	DN391B LED14/830 P12PSD D100 ALWP GMG2HE	1,300 lm	3000 K	111 lm/W	>80	28	10 or 40 degree(s)	Facetted reflector
911401570444	DN391B LED14/865 PSD D100 AL WP GCG2HE	1,400 lm	6500 K	120 lm/W	>80	28	10 or 40 degree(s)	Facetted reflector

Order Code	Full Product Name	Luminous Flux	Correlated Color Temperature (Nom)	Luminous Efficacy (rated) (Nom)	Color rendering index (CRI)	Number of light sources	Beam angle of light source	Optic type
911401570544	DN391B LED14/840 PSD D100 AL WP GCG2HE	1,400 lm	4000 K	120 lm/W	>80	28	10 or 40 degree(s)	Facetted reflector
911401570644	DN391B LED14/830 PSD D100 AL WP GCG2HE	1,300 lm	3000 K	111 lm/W	>80	28	10 or 40 degree(s)	Facetted reflector
911401570744	DN391B LED12/865 P10PSD D100 ALWP GMG2HE	1,200 lm	6500 K	120 lm/W	>80	28	10 or 40 degree(s)	Facetted reflector
911401570844	DN391B LED12/840 P10PSD D100 ALWP GMG2HE	1,200 lm	4000 K	120 lm/W	>80	28	10 or 40 degree(s)	Facetted reflector
911401570944	DN391B LED12/830 P10PSD D100 ALWP GMG2HE	1,100 lm	3000 K	111 lm/W	>80	28	10 or 40 degree(s)	Facetted reflector
911401571044	DN391B LED12/865 PSD D100 AL WP GCG2HE	1,200 lm	6500 K	120 lm/W	>80	28	10 or 40 degree(s)	Facetted reflector
911401571144	DN391B LED12/840 PSD D100 AL WP GCG2HE	1,200 lm	4000 K	120 lm/W	>80	28	10 or 40 degree(s)	Facetted reflector
911401571244	DN391B LED12/830 PSD D100 AL WP GCG2HE	1,100 lm	3000 K	111 lm/W	>80	28	10 or 40 degree(s)	Facetted reflector
911401577944	DN391B LED14/865 P12PSD D100 AL GMG2HE	1,400 lm	6500 K	120 lm/W	>80	28	10 or 40 degree(s)	Facetted reflector
911401578044	DN391B LED14/840 P12PSD D100 AL GMG2HE	1,400 lm	4000 K	120 lm/W	>80	28	10 or 40 degree(s)	Facetted reflector
911401578144	DN391B LED14/830 P12PSD D100 AL GMG2HE	1,300 lm	3000 K	111 lm/W	>80	28	10 or 40 degree(s)	Facetted reflector
911401578544	DN391B LED14/865 PSD D100 AL GCG2HE	1,400 lm	6500 K	120 lm/W	>80	28	10 or 40 degree(s)	Facetted reflector
911401578644	DN391B LED14/840 PSD D100 AL GCG2HE	1,400 lm	4000 K	120 lm/W	>80	28	10 or 40 degree(s)	Facetted reflector
911401578744	DN391B LED14/830 PSD D100 AL GCG2HE	1,300 lm	3000 K	111 lm/W	>80	28	10 or 40 degree(s)	Facetted reflector
911401579144	DN391B LED12/865 P10PSD D100 AL GMG2HE	1,200 lm	6500 K	120 lm/W	>80	28	10 or 40 degree(s)	Facetted reflector
911401579244	DN391B LED12/840 P10PSD D100 AL GMG2HE	1,200 lm	4000 K	120 lm/W	>80	28	10 or 40 degree(s)	Facetted reflector
911401579344	DN391B LED12/830 P10PSD D100 AL GMG2HE	1,100 lm	3000 K	111 lm/W	>80	28	10 or 40 degree(s)	Facetted reflector
911401579744	DN391B LED12/865 PSD D100 AL GCG2HE	1,200 lm	6500 K	120 lm/W	>80	28	10 or 40 degree(s)	Facetted reflector
911401579944	DN391B LED12/830 PSD D100 AL GCG2HE	1,100 lm	3000 K	111 lm/W	>80	28	10 or 40 degree(s)	Facetted reflector
911401503845	DN394X LED34/9TNW P27PSD D200 WH WP G2	3,400 lm	Tunable white 2700-6500 K	125 lm/W	≥90	96	- degree(s)	White reflector and opal cover
911401504145	DN394X LED34/9TNW P27PSD D200 WH WPCAUG2	3,400 lm	Tunable white 2700-6500 K	125 lm/W	≥90	96	- degree(s)	White reflector and opal cover
911401519944	DN393B LED26/840 P20PSU D200WHWP CAUG2HE	2,600 lm	4000 K	140 lm/W	>80	1	-	White reflector and opal cover
911401520344	DN393B LED26/840 P20PSU D200 WH CAUG2HE	2,600 lm	4000 K	140 lm/W	>80	1	-	White reflector and opal cover
911401526444	DN394B LED40/865 P29PSU D200 WH GMG2HE	4,000 lm	6500 K	140 lm/W	>80	1	-	White reflector and opal cover

Order Code	Full Product Name	Luminous Flux	Correlated Color Temperature (Nom)	Luminous Efficacy (rated) (Nom)	Color rendering index (CRI)	Number of light sources	Beam angle of light source	Optic type
911401526544	DN394B LED40/840 P29PSU D200 WH GMG2HE	4,000 lm	4000 K	140 lm/W	>80	1	-	White reflector and opal cover
911401526644	DN394B LED40/830 P29PSU D200 WH GMG2HE	3,700 lm	3000 K	130 lm/W	>80	1	-	White reflector and opal cover
911401527044	DN394B LED40/865 PSU D200 WH GCG2HE	4,000 lm	6500 K	140 lm/W	>80	1	-	White reflector and opal cover
911401527144	DN394B LED40/840 PSU D200 WH GCG2HE	4,000 lm	4000 K	140 lm/W	>80	1	-	White reflector and opal cover
911401527244	DN394B LED40/830 PSU D200 WH GCG2HE	3,700 lm	3000 K	130 lm/W	>80	1	-	White reflector and opal cover
911401527644	DN393B LED26/865 P19PSU D200 WH GMG2HE	2,600 lm	6500 K	140 lm/W	>80	1	-	White reflector and opal cover
911401527744	DN393B LED26/840 P19PSU D200 WH GMG2HE	2,600 lm	4000 K	140 lm/W	>80	1	-	White reflector and opal cover
911401527844	DN393B LED26/830 P19PSU D200 WH GMG2HE	2,400 lm	3000 K	130 lm/W	>80	1	-	White reflector and opal cover
911401528244	DN393B LED26/865 PSU D200 WH GCG2HE	2,600 lm	6500 K	140 lm/W	>80	1	-	White reflector and opal cover
911401528344	DN393B LED26/840 PSU D200 WH GCG2HE	2,600 lm	4000 K	140 lm/W	>80	1	-	White reflector and opal cover
911401528444	DN393B LED26/830 PSU D200 WH GCG2HE	2,400 lm	3000 K	130 lm/W	>80	1	-	White reflector and opal cover
911401530044	DN392B LED20/865 P14PSU D200 WH GMG2HE	2,000 lm	6500 K	140 lm/W	>80	1	-	White reflector and opal cover
911401530144	DN392B LED20/840 P14PSU D200 WH GMG2HE	2,000 lm	4000 K	140 lm/W	>80	1	-	White reflector and opal cover
911401530244	DN392B LED20/830 P14PSU D200 WH GMG2HE	1,850 lm	3000 K	130 lm/W	>80	1	-	White reflector and opal cover
911401530644	DN392B LED20/865 PSU D200 WH GCG2HE	2,000 lm	6500 K	140 lm/W	>80	1	-	White reflector and opal cover
911401530744	DN392B LED20/840 PSU D200 WH GCG2HE	2,000 lm	4000 K	140 lm/W	>80	1	-	White reflector and opal cover
911401530844	DN392B LED20/830 PSU D200 WH GCG2HE	1,850 lm	3000 K	130 lm/W	>80	1	-	White reflector and opal cover
911401537144	DN393X LED26/865 P20WIA D200 WH G2HE	2,600 lm	6500 K	137 lm/W	>80	1	-	White reflector and opal cover
911401537744	DN393X LED26/830 P20WIA D200 WH G2HE	2,400 lm	3000 K	127 lm/W	>80	1	-	White reflector and opal cover
911401538344	DN393X LED26/840 P20WIA D200 WH G2HE	2,600 lm	4000 K	137 lm/W	>80	1	-	White reflector and opal cover
911401571644	DN394B LED40/865 P29PSD D200 WH GMG2HE	4,000 lm	6500 K	137 lm/W	>80	78	10 or 40 degree(s)	White reflector and opal cover
911401571744	DN394B LED40/840 P29PSD D200 WH GMG2HE	4,000 lm	4000 K	137 lm/W	>80	78	10 or 40 degree(s)	White reflector and opal cover
911401571844	DN394B LED40/830 P29PSD D200 WH GMG2HE	3,700 lm	3000 K	127 lm/W	>80	78	10 or 40 degree(s)	White reflector and opal cover
911401572244	DN394B LED40/865 PSD D200 WH GCG2HE	4,000 lm	6500 K	137 lm/W	>80	78	10 or 40 degree(s)	White reflector and opal cover
911401572344	DN394B LED40/840 PSD D200 WH GCG2HE	4,000 lm	4000 K	137 lm/W	>80	78	10 or 40 degree(s)	White reflector and opal cover
911401572444	DN394B LED40/830 PSD D200 WH GCG2HE	3,700 lm	3000 K	127 lm/W	>80	78	10 or 40 degree(s)	White reflector and opal cover

Order Code	Full Product Name	Luminous Flux	Correlated Color Temperature (Nom)	Luminous Efficacy (rated) (Nom)	Color rendering index (CRI)	Number of light sources	Beam angle of light source	Optic type
911401572844	DN393B LED26/865 P20PSD D200 WH GMG2HE	2,600 lm	6500 K	137 lm/W	>80	48	10 or 40 degree(s)	White reflector and opal cover
911401572944	DN393B LED26/840 P20PSD D200 WH GMG2HE	2,600 lm	4000 K	137 lm/W	>80	48	10 or 40 degree(s)	White reflector and opal cover
911401573044	DN393B LED26/830 P20PSD D200 WH GMG2HE	2,400 lm	3000 K	127 lm/W	>80	48	10 or 40 degree(s)	White reflector and opal cover
911401573444	DN393B LED26/865 PSD D200 WH GCG2HE	2,600 lm	6500 K	137 lm/W	>80	48	10 or 40 degree(s)	White reflector and opal cover
911401573544	DN393B LED26/840 PSD D200 WH GCG2HE	2,600 lm	4000 K	137 lm/W	>80	48	10 or 40 degree(s)	White reflector and opal cover
911401573644	DN393B LED26/830 PSD D200 WH GCG2HE	2,400 lm	3000 K	127 lm/W	>80	48	10 or 40 degree(s)	White reflector and opal cover
911401575244	DN392B LED18/865 P14PSD D200 WH GMG2HE	1,850 lm	6500 K	137 lm/W	>80	48	10 or 40 degree(s)	White reflector and opal cover
911401575344	DN392B LED18/840 P14PSD D200 WH GMG2HE	1,850 lm	4000 K	137 lm/W	>80	48	10 or 40 degree(s)	White reflector and opal cover
911401575444	DN392B LED18/830 P14PSD D200 WH GMG2HE	1,700 lm	3000 K	127 lm/W	>80	48	10 or 40 degree(s)	White reflector and opal cover
911401575844	DN392B LED18/865 PSD D200 WH GCG2HE	1,850 lm	6500 K	137 lm/W	>80	48	10 or 40 degree(s)	White reflector and opal cover
911401575944	DN392B LED18/840 PSD D200 WH GCG2HE	1,850 lm	4000 K	137 lm/W	>80	48	10 or 40 degree(s)	White reflector and opal cover
911401576044	DN392B LED18/830 PSD D200 WH GCG2HE	1,700 lm	3000 K	127 lm/W	>80	48	10 or 40 degree(s)	White reflector and opal cover
911401586932	DN393B LED22/840 P20PSU D200 WH CAUG2	2,400 lm	4000 K	120 lm/W	>80	48	- degree(s)	White reflector and opal cover
911401588632	DN393B LED22/840 P20PSU D200 WH WP CAUG2	2,400 lm	4000 K	120 lm/W	>80	48	- degree(s)	White reflector and opal cover
911401539144	DN394X LED40/840 L1W D200 WH GCG2HE	4,000 lm	4000 K	137 lm/W	>80	78	10 or 40 degree(s)	White reflector and opal cover
911401539344	DN393X LED26/840 L1W D200 WH GCG2HE	2,600 lm	4000 K	130 lm/W	>80	48	10 or 40 degree(s)	White reflector and opal cover
911401540144	DN394X LED40/840 P29L1W D200 WH GMG2HE	4,000 lm	4000 K	137 lm/W	>80	78	10 or 40 degree(s)	White reflector and opal cover
911401540344	DN393X LED26/840 P20L1W D200 WH GMG2HE	2,600 lm	4000 K	130 lm/W	>80	48	10 or 40 degree(s)	White reflector and opal cover
911401503545	DN394X LED33/9TNW P27PSD D200 AL WP G2	3,300 lm	Tunable white 2700-6500 K	120 lm/W	≥90	96	- degree(s)	Facetted reflector
911401520744	DN394B LED38/865 P29PSU D200 ALWP GMG2HE	3,800 lm	6500 K	132 lm/W	>80	1	-	Facetted reflector
911401520844	DN394B LED38/840 P29PSU D200 ALWP GMG2HE	3,800 lm	4000 K	132 lm/W	>80	1	-	Facetted reflector
911401520944	DN394B LED38/830 P29PSU D200 ALWP GMG2HE	3,500 lm	3000 K	122 lm/W	>80	1	-	Facetted reflector
911401521044	DN394B LED38/865 PSU D200 AL WP GCG2HE	3,800 lm	6500 K	132 lm/W	>80	1	-	Facetted reflector
911401521144	DN394B LED38/840 PSU D200 AL WP GCG2HE	3,800 lm	4000 K	132 lm/W	>80	1	-	Facetted reflector

Order Code	Full Product Name	Luminous Flux	Correlated Color Temperature (Nom)	Luminous Efficacy (rated) (Nom)	Color rendering index (CRI)	Number of light sources	Beam angle of light source	Optic type
911401521244	DN394B LED38/830 PSU D200 AL WP GCG2HE	3,500 lm	3000 K	122 lm/W	>80	1	-	Facetted reflector
911401521344	DN393B LED25/865 P19PSU D200 ALWP GMG2HE	2,500 lm	6500 K	132 lm/W	>80	1	-	Facetted reflector
911401521444	DN393B LED25/840 P19PSU D200 ALWP GMG2HE	2,500 lm	4000 K	132 lm/W	>80	1	-	Facetted reflector
911401521544	DN393B LED25/830 P19PSU D200 ALWP GMG2HE	2,300 lm	3000 K	122 lm/W	>80	1	-	Facetted reflector
911401521644	DN393B LED25/865 PSU D200 AL WP GCG2HE	2,500 lm	6500 K	132 lm/W	>80	1	-	Facetted reflector
911401521744	DN393B LED25/840 PSU D200 AL WP GCG2HE	2,500 lm	4000 K	132 lm/W	>80	1	-	Facetted reflector
911401521844	DN393B LED25/830 PSU D200 AL WP GCG2HE	2,300 lm	3000 K	122 lm/W	>80	1	-	Facetted reflector
911401522544	DN392B LED18/865 P14PSU D200 ALWP GMG2HE	1,850 lm	6500 K	132 lm/W	>80	1	-	Facetted reflector
911401522644	DN392B LED18/840 P14PSU D200 ALWP GMG2HE	1,850 lm	4000 K	132 lm/W	>80	1	-	Facetted reflector
911401522744	DN392B LED18/830 P14PSU D200 ALWP GMG2HE	1,700 lm	3000 K	122 lm/W	>80	1	-	Facetted reflector
911401522844	DN392B LED18/865 PSU D200 AL WP GCG2HE	1,850 lm	6500 K	132 lm/W	>80	1	-	Facetted reflector
911401522944	DN392B LED18/840 PSU D200 AL WP GCG2HE	1,850 lm	4000 K	132 lm/W	>80	1	-	Facetted reflector
911401523044	DN392B LED18/830 PSU D200 AL WP GCG2HE	1,700 lm	3000 K	122 lm/W	>80	1	-	Facetted reflector
911401526144	DN394B LED38/865 P29PSU D200 AL GMG2HE	3,800 lm	6500 K	132 lm/W	>80	1	-	Facetted reflector
911401526244	DN394B LED38/840 P29PSU D200 AL GMG2HE	3,800 lm	4000 K	132 lm/W	>80	1	-	Facetted reflector
911401526344	DN394B LED38/830 P29PSU D200 AL GMG2HE	3,500 lm	3000 K	122 lm/W	>80	1	-	Facetted reflector
911401526744	DN394B LED38/865 PSU D200 AL GCG2HE	3,800 lm	6500 K	132 lm/W	>80	1	-	Facetted reflector
911401526844	DN394B LED38/840 PSU D200 AL GCG2HE	3,800 lm	4000 K	132 lm/W	>80	1	-	Facetted reflector
911401526944	DN394B LED38/830 PSU D200 AL GCG2HE	3,500 lm	3000 K	122 lm/W	>80	1	-	Facetted reflector
911401527344	DN393B LED25/865 P19PSU D200 AL GMG2HE	2,500 lm	6500 K	132 lm/W	>80	1	-	Facetted reflector
911401527444	DN393B LED25/840 P19PSU D200 AL GMG2HE	2,500 lm	4000 K	132 lm/W	>80	1	-	Facetted reflector
911401527544	DN393B LED25/830 P19PSU D200 AL GMG2HE	2,300 lm	3000 K	122 lm/W	>80	1	-	Facetted reflector
911401527944	DN393B LED25/865 PSU D200 AL GCG2HE	2,500 lm	6500 K	132 lm/W	>80	1	-	Facetted reflector
911401528044	DN393B LED25/840 PSU D200 AL GCG2HE	2,500 lm	4000 K	132 lm/W	>80	1	-	Facetted reflector
911401528144	DN393B LED25/830 PSU D200 AL GCG2HE	2,300 lm	3000 K	122 lm/W	>80	1	-	Facetted reflector
911401529744	DN392B LED18/865 P14PSU D200 AL GMG2HE	1,850 lm	6500 K	132 lm/W	>80	1	-	Facetted reflector

Order Code	Full Product Name	Luminous Flux	Correlated Color Temperature (Nom)	Luminous Efficacy (rated) (Nom)	Color rendering index (CRI)	Number of light sources	Beam angle of light source	Optic type
911401529844	DN392B LED18/840 P14PSU D200 AL GMG2HE	1,850 lm	4000 K	132 lm/W	>80	1	-	Facetted reflector
911401529944	DN392B LED18/830 P14PSU D200 AL GMG2HE	1,700 lm	3000 K	122 lm/W	>80	1	-	Facetted reflector
911401530344	DN392B LED18/865 PSU D200 AL GCG2HE	1,850 lm	6500 K	132 lm/W	>80	1	-	Facetted reflector
911401530444	DN392B LED18/840 PSU D200 AL GCG2HE	1,850 lm	4000 K	132 lm/W	>80	1	-	Facetted reflector
911401530544	DN392B LED18/830 PSU D200 AL GCG2HE	1,700 lm	3000 K	122 lm/W	>80	1	-	Facetted reflector
911401537044	DN393X LED25/865 P20WIA D200 AL G2HE	2,500 lm	6500 K	130 lm/W	>80	1	-	Facetted reflector
911401537644	DN393X LED25/830 P20WIA D200 AL G2HE	2,300 lm	3000 K	120 lm/W	>80	1	-	Facetted reflector
911401538244	DN393X LED25/840 P20WIA D200 AL G2HE	2,500 lm	4000 K	130 lm/W	>80	1	-	Facetted reflector
911401566844	DN394B LED38/865 P29PSD D200 ALWP GMG2HE	3,800 lm	6500 K	130 lm/W	>80	78	10 or 40 degree(s)	Facetted reflector
911401566944	DN394B LED38/840 P29PSD D200 ALWP GMG2HE	3,800 lm	4000 K	130 lm/W	>80	78	10 or 40 degree(s)	Facetted reflector
911401567044	DN394B LED38/830 P29PSD D200 ALWP GMG2HE	3,800 lm	3000 K	120 lm/W	>80	78	10 or 40 degree(s)	Facetted reflector
911401567144	DN394B LED38/865 PSD D200 AL WP GCG2HE	3,800 lm	6500 K	130 lm/W	>80	78	10 or 40 degree(s)	Facetted reflector
911401567244	DN394B LED38/840 PSD D200 AL WP GCG2HE	3,800 lm	4000 K	130 lm/W	>80	78	10 or 40 degree(s)	Facetted reflector
911401567344	DN394B LED38/830 PSD D200 AL WP GCG2HE	3,500 lm	3000 K	120 lm/W	>80	78	10 or 40 degree(s)	Facetted reflector
911401567444	DN393B LED25/865 P20PSD D200 ALWP GMG2HE	2,500 lm	6500 K	130 lm/W	>80	48	10 or 40 degree(s)	Facetted reflector
911401567544	DN393B LED25/840 P20PSD D200 ALWP GMG2HE	2,500 lm	4000 K	130 lm/W	>80	48	10 or 40 degree(s)	Facetted reflector
911401567644	DN393B LED25/830 P20PSD D200 ALWP GMG2HE	2,300 lm	3000 K	120 lm/W	>80	48	10 or 40 degree(s)	Facetted reflector
911401567744	DN393B LED25/865 PSD D200 AL WP GCG2HE	2,500 lm	6500 K	130 lm/W	>80	48	10 or 40 degree(s)	Facetted reflector
911401567844	DN393B LED25/840 PSD D200 AL WP GCG2HE	2,500 lm	4000 K	130 lm/W	>80	48	10 or 40 degree(s)	Facetted reflector
911401567944	DN393B LED25/830 PSD D200 AL WP GCG2HE	2,300 lm	3000 K	120 lm/W	>80	48	10 or 40 degree(s)	Facetted reflector
911401568644	DN392B LED18/865 P14PSD D200 ALWP GMG2HE	1,750 lm	6500 K	130 lm/W	>80	48	10 or 40 degree(s)	Facetted reflector
911401568744	DN392B LED18/840 P14PSD D200 ALWP GMG2HE	1,750 lm	4000 K	130 lm/W	>80	48	10 or 40 degree(s)	Facetted reflector
911401568844	DN392B LED18/830 P14PSD D200 ALWP GMG2HE	1,650 lm	3000 K	120 lm/W	>80	48	10 or 40 degree(s)	Facetted reflector
911401568944	DN392B LED18/865 PSD D200 AL WP GCG2HE	1,750 lm	6500 K	130 lm/W	>80	48	10 or 40 degree(s)	Facetted reflector
911401569044	DN392B LED18/840 PSD D200 AL WP GCG2HE	1,750 lm	4000 K	130 lm/W	>80	48	10 or 40 degree(s)	Facetted reflector
911401569144	DN392B LED18/830 PSD D200 AL WP GCG2HE	1,650 lm	3000 K	120 lm/W	>80	48	10 or 40 degree(s)	Facetted reflector

Order Code	Full Product Name	Luminous Flux	Correlated Color Temperature (Nom)	Luminous Efficacy (rated) (Nom)	Color rendering index (CRI)	Number of light sources	Beam angle of light source	Optic type
911401571344	DN394B LED38/865 P29PSD D200 AL GMG2HE	3,800 lm	6500 K	130 lm/W	>80	78	10 or 40 degree(s)	Facetted reflector
911401571444	DN394B LED38/840 P29PSD D200 AL GMG2HE	3,800 lm	4000 K	130 lm/W	>80	78	10 or 40 degree(s)	Facetted reflector
911401571544	DN394B LED38/830 P29PSD D200 AL GMG2HE	3,500 lm	3000 K	120 lm/W	>80	78	10 or 40 degree(s)	Facetted reflector
911401571944	DN394B LED38/865 PSD D200 AL GCG2HE	3,800 lm	6500 K	130 lm/W	>80	78	10 or 40 degree(s)	Facetted reflector
911401572044	DN394B LED38/840 PSD D200 AL GCG2HE	3,800 lm	4000 K	130 lm/W	>80	78	10 or 40 degree(s)	Facetted reflector
911401572144	DN394B LED38/830 PSD D200 AL GCG2HE	3,500 lm	3000 K	120 lm/W	>80	78	10 or 40 degree(s)	Facetted reflector
911401572544	DN393B LED25/865 P20PSD D200 AL GMG2HE	2,500 lm	6500 K	130 lm/W	>80	48	10 or 40 degree(s)	Facetted reflector
911401572644	DN393B LED25/840 P20PSD D200 AL GMG2HE	2,500 lm	4000 K	130 lm/W	>80	48	10 or 40 degree(s)	Facetted reflector
911401572744	DN393B LED25/830 P20PSD D200 AL GMG2HE	2,300 lm	3000 K	120 lm/W	>80	48	10 or 40 degree(s)	Facetted reflector
911401573144	DN393B LED25/865 PSD D200 AL GCG2HE	2,500 lm	6500 K	130 lm/W	>80	48	10 or 40 degree(s)	Facetted reflector
911401573244	DN393B LED25/840 PSD D200 AL GCG2HE	2,500 lm	4000 K	130 lm/W	>80	48	10 or 40 degree(s)	Facetted reflector
911401573344	DN393B LED25/830 PSD D200 AL GCG2HE	2,300 lm	3000 K	120 lm/W	>80	48	10 or 40 degree(s)	Facetted reflector
911401574944	DN392B LED18/865 P14PSD D200 AL GMG2HE	1,850 lm	6500 K	130 lm/W	>80	48	10 or 40 degree(s)	Facetted reflector
911401575044	DN392B LED18/840 P14PSD D200 AL GMG2HE	1,850 lm	4000 K	130 lm/W	>80	48	10 or 40 degree(s)	Facetted reflector
911401575144	DN392B LED18/830 P14PSD D200 AL GMG2HE	1,700 lm	3000 K	120 lm/W	>80	48	10 or 40 degree(s)	Facetted reflector
911401575544	DN392B LED18/865 PSD D200 AL GCG2HE	1,750 lm	6500 K	130 lm/W	>80	48	10 or 40 degree(s)	Facetted reflector
911401575644	DN392B LED18/840 PSD D200 AL GCG2HE	1,750 lm	4000 K	130 lm/W	>80	48	10 or 40 degree(s)	Facetted reflector
911401575744	DN392B LED18/830 PSD D200 AL GCG2HE	1,650 lm	3000 K	120 lm/W	>80	48	10 or 40 degree(s)	Facetted reflector
911401577042	DN393X LED22/840 P20L1W D200 WH CAUG2	2,450 lm	4000 K	120 lm/W	>80	1	- degree(s)	Facetted reflector
911401577542	DN392X LED17/840 P15L1W D150 WH CAUG2	1,750 lm	4000 K	120 lm/W	>80	1	- degree(s)	Facetted reflector
911401538844	DN392X LED20/840 L1W D150 WH GCG2HE	2,000 lm	4000 K	130 lm/W	>80	40	10 or 40 degree(s)	White reflector and opal cover
911401539544	DN392X LED22/840 L1W D150 WH GCG2HE	2,200 lm	4000 K	135 lm/W	>80	40	10 or 40 degree(s)	White reflector and opal cover
911401539944	DN392X LED20/840 P15L1W D150 WH GMG2HE	2,000 lm	4000 K	130 lm/W	>80	40	10 or 40 degree(s)	White reflector and opal cover
911401540544	DN392X LED22/840 P17L1W D150 WH GMG2HE	2,200 lm	4000 K	130 lm/W	>80	40	10 or 40 degree(s)	White reflector and opal cover

Order Code	Full Product Name	Luminous Flux	Correlated Color Temperature (Nom)	Luminous Efficacy (rated) (Nom)	Color rendering index (CRI)	Number of light sources	Beam angle of light source	Optic type
911401503945	DN392X LED17/9TNW P15PSD D150 WH WP G2	1,700 lm	Tunable white 2700-6500 K	120 lm/W	≥90	48	- degree(s)	White reflector and opal cover
911401504245	DN392X LED17/9TNW P15PSD D150 WH WPCAUG2	1,700 lm	Tunable white 2700-6500 K	120 lm/W	≥90	48	- degree(s)	White reflector and opal cover
911401520044	DN392B LED20/840 P15PSU D150WHWP CAUG2HE	2,000 lm	4000 K	138 lm/W	>80	1	-	White reflector and opal cover
911401520144	DN391B LED13/840 P11PSU D150WHWP CAUG2HE	1,300 lm	4000 K	138 lm/W	>80	1	-	White reflector and opal cover
911401520444	DN392B LED20/840 P15PSU D150 WH CAUG2HE	2,000 lm	4000 K	138 lm/W	>80	1	-	White reflector and opal cover
911401520544	DN391B LED13/840 P11PSU D150 WH CAUG2HE	1,300 lm	4000 K	138 lm/W	>80	1	-	White reflector and opal cover
911401528844	DN392B LED22/865 P16PSU D150 WH GMG2HE	2,200 lm	6500 K	138 lm/W	>80	1	-	White reflector and opal cover
911401528944	DN392B LED22/840 P16PSU D150 WH GMG2HE	2,200 lm	4000 K	138 lm/W	>80	1	-	White reflector and opal cover
911401529044	DN392B LED22/830 P16PSU D150 WH GMG2HE	2,000 lm	3000 K	130 lm/W	>80	1	-	White reflector and opal cover
911401529444	DN392B LED22/865 PSU D150 WH GCG2HE	2,200 lm	6500 K	138 lm/W	>80	1	-	White reflector and opal cover
911401529544	DN392B LED22/840 PSU D150 WH GCG2HE	2,200 lm	4000 K	138 lm/W	>80	1	-	White reflector and opal cover
911401529644	DN392B LED22/830 PSU D150 WH GCG2HE	2,000 lm	3000 K	130 lm/W	>80	1	-	White reflector and opal cover
911401531244	DN392B LED20/865 P14PSU D150 WH GMG2HE	2,000 lm	6500 K	138 lm/W	>80	1	-	White reflector and opal cover
911401531344	DN392B LED20/840 P14PSU D150 WH GMG2HE	2,000 lm	4000 K	138 lm/W	>80	1	-	White reflector and opal cover
911401531444	DN392B LED20/830 P14PSU D150 WH GMG2HE	1,850 lm	3000 K	130 lm/W	>80	1	-	White reflector and opal cover
911401531844	DN392B LED20/865 PSU D150 WH GCG2HE	2,000 lm	6500 K	138 lm/W	>80	1	-	White reflector and opal cover
911401531944	DN392B LED20/840 PSU D150 WH GCG2HE	2,000 lm	4000 K	138 lm/W	>80	1	-	White reflector and opal cover
911401532044	DN392B LED20/830 PSU D150 WH GCG2HE	1,850 lm	3000 K	130 lm/W	>80	1	-	White reflector and opal cover
911401532444	DN391B LED13/865 P10PSU D150 WH GMG2HE	1,300 lm	6500 K	138 lm/W	>80	1	-	White reflector and opal cover
911401532544	DN391B LED13/840 P10PSU D150 WH GMG2HE	1,300 lm	4000 K	138 lm/W	>80	1	-	White reflector and opal cover
911401532644	DN391B LED13/830 P10PSU D150 WH GMG2HE	1,200 lm	3000 K	130 lm/W	>80	1	-	White reflector and opal cover
911401533044	DN391B LED13/865 PSU D150 WH GCG2HE	1,300 lm	6500 K	138 lm/W	>80	1	-	White reflector and opal cover
911401533144	DN391B LED13/840 PSU D150 WH GCG2HE	1,300 lm	4000 K	138 lm/W	>80	1	-	White reflector and opal cover
911401533244	DN391B LED13/830 PSU D150 WH GCG2HE	1,200 lm	3000 K	130 lm/W	>80	1	-	White reflector and opal cover

Order Code	Full Product Name	Luminous Flux	Correlated Color Temperature (Nom)	Luminous Efficacy (rated) (Nom)	Color rendering index (CRI)	Number of light sources	Beam angle of light source	Optic type
911401537344	DN392X LED20/865 P15WIA D150 WH G2HE	2,000 lm	6500 K	135 lm/W	>80	1	-	White reflector and opal cover
911401537944	DN392X LED20/830 P15WIA D150 WH G2HE	1,850 lm	3000 K	125 lm/W	>80	1	-	White reflector and opal cover
911401538544	DN392X LED20/840 P15WIA D150 WH G2HE	2,000 lm	4000 K	135 lm/W	>80	1	-	White reflector and opal cover
911401566544	DN392B LED19/865 P14PSD D150 WH GMG2HE	1,900 lm	6500 K	135 lm/W	>80	48	10 or 40 degree(s)	White reflector and opal cover
911401566644	DN392B LED19/840 P14PSD D150 WH GMG2HE	1,900 lm	4000 K	135 lm/W	>80	48	10 or 40 degree(s)	White reflector and opal cover
911401566744	DN392B LED19/830 P14PSD D150 WH GMG2HE	1,750 lm	3000 K	125 lm/W	>80	48	10 or 40 degree(s)	White reflector and opal cover
911401574044	DN392B LED23/865 P17PSD D150 WH GMG2HE	2,300 lm	6500 K	135 lm/W	>80	48	10 or 40 degree(s)	White reflector and opal cover
911401574144	DN392B LED23/840 P17PSD D150 WH GMG2HE	2,300 lm	4000 K	135 lm/W	>80	48	10 or 40 degree(s)	White reflector and opal cover
911401574244	DN392B LED23/830 P17PSD D150 WH GMG2HE	2,100 lm	3000 K	125 lm/W	>80	48	10 or 40 degree(s)	White reflector and opal cover
911401574644	DN392B LED23/865 PSD D150 WH GCG2HE	2,300 lm	6500 K	135 lm/W	>80	48	10 or 40 degree(s)	White reflector and opal cover
911401574744	DN392B LED23/840 PSD D150 WH GCG2HE	2,300 lm	4000 K	135 lm/W	>80	48	10 or 40 degree(s)	White reflector and opal cover
911401574844	DN392B LED23/830 PSD D150 WH GCG2HE	2,100 lm	3000 K	125 lm/W	>80	48	10 or 40 degree(s)	White reflector and opal cover
911401576444	DN392B LED19/865 PSD D150 WH GCG2HE	1,900 lm	6500 K	135 lm/W	>80	48	10 or 40 degree(s)	White reflector and opal cover
911401576544	DN392B LED19/840 PSD D150 WH GCG2HE	1,900 lm	4000 K	135 lm/W	>80	48	10 or 40 degree(s)	White reflector and opal cover
911401576644	DN392B LED19/830 PSD D150 WH GCG2HE	1,750 lm	3000 K	116 lm/W	>80	48	10 or 40 degree(s)	White reflector and opal cover
911401577044	DN391B LED13/865 P11PSD D150 WH GMG2HE	1,300 lm	6500 K	125 lm/W	>80	24	10 or 40 degree(s)	White reflector and opal cover
911401577144	DN391B LED13/840 P11PSD D150 WH GMG2HE	1,300 lm	4000 K	125 lm/W	>80	24	10 or 40 degree(s)	White reflector and opal cover
911401577244	DN391B LED13/830 P11PSD D150 WH GMG2HE	1,200 lm	3000 K	116 lm/W	>80	24	10 or 40 degree(s)	White reflector and opal cover
911401577644	DN391B LED13/865 PSD D150 WH GCG2HE	1,300 lm	6500 K	125 lm/W	>80	24	10 or 40 degree(s)	White reflector and opal cover
911401577744	DN391B LED13/840 PSD D150 WH GCG2HE	1,300 lm	4000 K	125 lm/W	>80	24	10 or 40 degree(s)	White reflector and opal cover
911401577844	DN391B LED13/830 PSD D150 WH GCG2HE	1,200 lm	3000 K	116 lm/W	>80	24	10 or 40 degree(s)	White reflector and opal cover
911401585532	DN391B LED11/840 P11PSU D150 WH CAUG2	1,200 lm	4000 K	113 lm/W	>80	24	- degree(s)	White reflector and opal cover
911401587832	DN391B LED11/840 P11PSU D150 WH WP CAUG2	1,200 lm	4000 K	113 lm/W	>80	24	- degree(s)	White reflector and opal cover
911401587932	DN392B LED17/840 P15PSU D150 WH WP CAUG2	1,800 lm	4000 K	120 lm/W	>80	40	- degree(s)	White reflector and opal cover
911401538944	DN392X LED18/840 L1W D150 AL GCG2HE	1,850 lm	4000 K	120 lm/W	>80	40	10 or 40 degree(s)	White reflector and opal cover
911401539444	DN392X LED20/840 L1W D150 AL GCG2HE	2,000 lm	4000 K	120 lm/W	>80	40	10 or 40 degree(s)	White reflector and opal cover

Order Code	Full Product Name	Luminous Flux	Correlated Color Temperature (Nom)	Luminous Efficacy (rated) (Nom)	Color rendering index (CRI)	Number of light sources	Beam angle of light source	Optic type
911401539844	DN392X LED18/840 P15L1W D150 AL GMG2HE	1,850 lm	4000 K	120 lm/W	>80	40	10 or 40 degree(s)	White reflector and opal cover
911401540444	DN392X LED20/840 P17L1W D150 AL GMG2HE	2,000 lm	4000 K	120 lm/W	>80	40	10 or 40 degree(s)	White reflector and opal cover

Operating and Electrical

Order Code	Full Product Name	Power Consumption	Suitable for random switching
911401539044	DN394X LED38/840 L1W D200 AL GCG2HE	29.3 W	No
911401539244	DN393X LED25/840 L1W D200 AL GCG2HE	19.9 W	No
911401540044	DN394X LED38/840 P29L1W D200 AL GMG2HE	29.3 W	No
911401540244	DN393X LED25/840 P20L1W D200 AL GMG2HE	19.9 W	No
911401504045	DN391X LED8/9TNW P7PSD D100 WH WP G2	7 W	Yes
911401504345	DN391X LED8/9TNW P7PSD D100 WH WPCAUG2	7 W	Yes
911401520244	DN390B LED7/840 P6PSU D100WHWP CAUG2HE	5.8 W	No
911401520644	DN390B LED7/840 P6PSU D100 WH CAUG2HE	5.8 W	No
911401533644	DN391B LED15/865 P11PSU D100 WH GMG2HE	11.4 W	No
911401533744	DN391B LED15/840 P11PSU D100 WH GMG2HE	11.4 W	No
911401533844	DN391B LED15/830 P11PSU D100 WH GMG2HE	11.4 W	No
911401534244	DN391B LED15/865 PSU D100 WH GCG2HE	11.4 W	No
911401534344	DN391B LED15/840 PSU D100 WH GCG2HE	11.4 W	No
911401534444	DN391B LED15/830 PSU D100 WH GCG2HE	11.4 W	No
911401534844	DN391B LED12/865 P10PSU D100 WH GMG2HE	9.8 W	No
911401534944	DN391B LED12/840 P10PSU D100 WH GMG2HE	9.8 W	No
911401535044	DN391B LED12/830 P10PSU D100 WH GMG2HE	9.8 W	No
911401535544	DN391B LED12/865 PSU D100 WH GCG2HE	9.8 W	No
911401535644	DN391B LED12/840 PSU D100 WH GCG2HE	9.8 W	No
911401535744	DN391B LED12/830 PSU D100 WH GCG2HE	9.8 W	No
911401536144	DN390B LED7/865 P6PSU D100 WH GMG2HE	5.8 W	No
911401536244	DN390B LED7/840 P6PSU D100 WH GMG2HE	5.8 W	No
911401536344	DN390B LED7/830 P6PSU D100 WH GMG2HE	5.8 W	No
911401536744	DN390B LED7/865 PSU D100 WH GCG2HE	5.8 W	No
911401536844	DN390B LED7/840 PSU D100 WH GCG2HE	5.8 W	No
911401536944	DN390B LED7/830 PSU D100 WH GCG2HE	5.8 W	No
911401537544	DN391X LED15/865 P12WIA D100 WH G2HE	12 W	No
911401538144	DN391X LED15/830 P12WIA D100 WH G2HE	12 W	No
911401538744	DN391X LED15/840 P12WIA D100WH G2HE	12 W	No
911401578244	DN391B LED15/865 P12PSD D100 WH GMG2HE	12 W	No
911401578344	DN391B LED15/840 P12PSD D100 WH GMG2HE	12 W	No
911401578444	DN391B LED15/830 P12PSD D100 WH GMG2HE	12 W	No
911401578844	DN391B LED15/865 PSD D100 WH GCG2HE	12 W	No

Order Code	Full Product Name	Power Consumption	Suitable for random switching
911401578944	DN391B LED15/840 PSD D100 WH GCG2HE	12 W	No
911401579044	DN391B LED15/830 PSD D100 WH GCG2HE	12 W	No
911401579444	DN391B LED12/865 P10PSD D100 WH GMG2HE	10.2 W	No
911401579544	DN391B LED12/840 P10PSD D100 WH GMG2HE	10.2 W	No
911401579644	DN391B LED12/830 P10PSD D100 WH GMG2HE	10.2 W	No
911401580044	DN391B LED12/865 PSD D100 WH GCG2HE	10.2 W	No
911401580144	DN391B LED12/840 PSD D100 WH GCG2HE	10.2 W	No
911401580244	DN391B LED12/830 PSD D100 WH GCG2HE	10.2 W	No
911401539644	DN391X LED14/840 L1W D100 AL GCG2HE	12 W	No
911401540644	DN391X LED14/840 P11L1W D100 AL GMG2HE	12 W	No
911401503645	DN392X LED16/9TNW P15PSD D150 AL WP G2	15 W	Yes
911401521944	DN392B LED20/865 P16PSU D150 ALWP GMG2HE	16 W	No
911401522044	DN392B LED20/840 P16PSU D150 ALWP GMG2HE	16 W	No
911401522144	DN392B LED20/830 P16PSU D150 ALWP GMG2HE	16 W	No
911401522244	DN392B LED20/865 PSU D150 AL WP GCG2HE	16 W	No
911401522344	DN392B LED20/840 PSU D150 AL WP GCG2HE	16 W	No
911401522444	DN392B LED20/830 PSU D150 AL WP GCG2HE	16 W	No
911401523144	DN392B LED18/865 P14PSU D150 ALWP GMG2HE	14.4 W	No
911401523244	DN392B LED18/840 P14PSU D150 ALWP GMG2HE	14.4 W	No
911401523344	DN392B LED18/830 P14PSU D150 ALWP GMG2HE	14.4 W	No
911401523444	DN392B LED18/865 PSU D150 AL WP GCG2HE	14.4 W	No
911401523544	DN392B LED18/840 PSU D150 AL WP GCG2HE	14.4 W	No
911401523644	DN392B LED18/830 PSU D150 AL WP GCG2HE	14.4 W	No
911401523744	DN391B LED12/865 P10PSU D150 ALWP GMG2HE	9.8 W	No
911401523844	DN391B LED12/840 P10PSU D150 ALWP GMG2HE	9.8 W	No
911401523944	DN391B LED12/830 P10PSU D150 ALWP GMG2HE	9.8 W	No
911401524044	DN391B LED12/865 PSU D150 AL WP GCG2HE	9.8 W	No
911401524144	DN391B LED12/840 PSU D150 AL WP GCG2HE	9.8 W	No
911401524244	DN391B LED12/830 PSU D150 AL WP GCG2HE	9.8 W	No
911401528544	DN392B LED20/865 P16PSU D150 AL GMG2HE	16 W	No
911401528644	DN392B LED20/840 P16PSU D150 AL GMG2HE	16 W	No
911401528744	DN392B LED20/830 P16PSU D150 AL GMG2HE	16 W	No
911401529144	DN392B LED20/865 PSU D150 AL GCG2HE	16 W	No
911401529244	DN392B LED20/840 PSU D150 AL GCG2HE	16 W	No
911401529344	DN392B LED20/830 PSU D150 AL GCG2HE	16 W	No
911401530944	DN392B LED18/865 P14PSU D150 AL GMG2HE	14.4 W	No
911401531044	DN392B LED18/840 P14PSU D150 AL GMG2HE	14.4 W	No
911401531144	DN392B LED18/830 P14PSU D150 AL GMG2HE	14.4 W	No
911401531544	DN392B LED18/865 PSU D150 AL GCG2HE	14.4 W	No
911401531644	DN392B LED18/840 PSU D150 AL GCG2HE	14.4 W	No
911401531744	DN392B LED18/830 PSU D150 AL GCG2HE	14.4 W	No
911401532144	DN391B LED12/865 P10PSU D150 AL GMG2HE	9.8 W	No

Order Code	Full Product Name	Power Consumption	Suitable for random switching
911401532244	DN391B LED12/840 P10PSU D150 AL GMG2HE	9.8 W	No
911401532344	DN391B LED12/830 P10PSU D150 AL GMG2HE	9.8 W	No
911401532744	DN391B LED12/865 PSU D150 AL GCG2HE	9.8 W	No
911401532844	DN391B LED12/840 PSU D150 AL GCG2HE	9.8 W	No
911401532944	DN391B LED13/830 PSU D150 AL GCG2HE	9.8 W	No
911401537244	DN392X LED18/865 P15WIA D150 AL G2HE	15 W	No
911401537844	DN392X LED18/830 P15WIA D150 AL G2HE	15 W	No
911401538444	DN392X LED18/840 P15WIA D150 AL G2HE	15 W	No
911401565944	DN392B LED18/865 P14PSD D150 ALWP GMG2HE	13.4 W	No
911401566044	DN392B LED18/840 P14PSD D150 ALWP GMG2HE	13.4 W	No
911401566144	DN392B LED18/830 P14PSD D150 ALWP GMG2HE	13.4 W	No
911401566244	DN392B LED18/865 P14PSD D150 AL GMG2HE	13.4 W	No
911401566344	DN392B LED18/840 P14PSD D150 AL GMG2HE	13.4 W	No
911401566444	DN392B LED18/830 P14PSD D150 AL GMG2HE	13.4 W	No
911401568044	DN392B LED22/865 P17PSD D150 ALWP GMG2HE	17.3 W	No
911401568144	DN392B LED22/840 P17PSD D150 ALWP GMG2HE	17.3 W	No
911401568244	DN392B LED22/830 P17PSD D150 ALWP GMG2HE	17.3 W	No
911401568344	DN392B LED22/865 PSD D150 AL WP GCG2HE	17.3 W	No
911401568444	DN392B LED22/840 PSD D150 AL WP GCG2HE	17.3 W	No
911401568544	DN392B LED22/830 PSD D150 AL WP GCG2HE	17.3 W	No
911401569244	DN392B LED18/865 PSD D150 AL WP GCG2HE	13.4 W	No
911401569344	DN392B LED18/840 PSD D150 AL WP GCG2HE	13.4 W	No
911401569444	DN392B LED18/830 PSD D150 AL WP GCG2HE	13.4 W	No
911401569544	DN391B LED12/865 P11PSD D150 ALWP GMG2HE	10.6 W	No
911401569644	DN391B LED12/840 P11PSD D150 ALWP GMG2HE	10.6 W	No
911401569744	DN391B LED12/830 P11PSD D150 ALWP GMG2HE	10.6 W	No
911401569844	DN391B LED12/865 PSD D150 AL WP GCG2HE	10.6 W	No
911401569944	DN391B LED12/840 PSD D150 AL WP GCG2HE	10.6 W	No
911401570044	DN391B LED12/830 PSD D150 AL WP GCG2HE	10.6 W	No
911401573744	DN392B LED22/865 P17PSD D150 AL GMG2HE	17.3 W	No
911401573844	DN392B LED22/840 P17PSD D150 AL GMG2HE	17.3 W	No
911401573944	DN392B LED22/830 P17PSD D150 AL GMG2HE	17.3 W	No
911401574344	DN392B LED22/865 PSD D150 AL GCG2HE	17.3 W	No
911401574444	DN392B LED22/840 PSD D150 AL GCG2HE	17.3 W	No
911401574544	DN392B LED22/830 PSD D150 AL GCG2HE	17.3 W	No
911401576144	DN392B LED18/865 PSD D150 AL GCG2HE	13.4 W	No
911401576244	DN392B LED18/840 PSD D150 AL GCG2HE	13.4 W	No
911401576344	DN392B LED18/830 PSD D150 AL GCG2HE	13.4 W	No
911401576744	DN391B LED12/865 P11PSD D150 AL GMG2HE	10.6 W	No
911401576844	DN391B LED12/840 P11PSD D150 AL GMG2HE	10.6 W	No
911401576944	DN391B LED12/830 P11PSD D150 AL GMG2HE	10.6 W	No
911401577344	DN391B LED12/865 PSD D150 AL GCG2HE	10.6 W	No

Order Code	Full Product Name	Power Consumption	Suitable for random switching
911401577444	DN391B LED12/840 PSD D150 AL GCG2HE	10.6 W	No
911401577544	DN391B LED12/830 PSD D150 AL GCG2HE	10.6 W	No
911401539744	DN391X LED15/840 L1W D100 WH GCG2HE	12 W	No
911401540744	DN391X LED15/840 P11L1W D100 WH GMG2HE	12 W	No
911401577142	DN393X LED22/840 P20L1W D200 AL CAUG2	19.9 W	No
911401577442	DN392X LED17/840 P15L1W D150 AL CAUG2	15 W	No
911401503745	DN391X LED7/9TNW P7PSD D100 AL WP G2	7 W	Yes
911401524344	DN391B LED14/865 P11PSU D100 ALWP GMG2HE	11.4 W	No
911401524444	DN391B LED14/840 P11PSU D100 ALWP GMG2HE	11.4 W	No
911401524544	DN391B LED14/830 P11PSU D100 ALWP GMG2HE	11.4 W	No
911401524644	DN391B LED14/865 PSU D100 AL WP GCG2HE	11.4 W	No
911401524744	DN391B LED14/840 PSU D100 AL WP GCG2HE	11.4 W	No
911401524844	DN391B LED14/830 PSU D100 AL WP GCG2HE	11.4 W	No
911401524944	DN391B LED12/865 P10PSU D100 ALWP GMG2HE	9.8 W	No
911401525044	DN391B LED12/840 P10PSU D100 ALWP GMG2HE	9.8 W	No
911401525144	DN391B LED12/830 P10PSU D100 ALWP GMG2HE	9.8 W	No
911401525244	DN391B LED12/865 PSU D100 AL WP GCG2HE	9.8 W	No
911401525344	DN391B LED12/840 PSU D100 AL WP GCG2HE	9.8 W	No
911401525444	DN391B LED12/830 PSU D100 AL WP GCG2HE	9.8 W	No
911401525544	DN390B LED7/865 P6PSU D100 AL WP GMG2HE	5.8 W	No
911401525644	DN390B LED7/840 P6PSU D100 AL WP GMG2HE	5.8 W	No
911401525744	DN390B LED7/830 P6PSU D100 AL WP GMG2HE	5.8 W	No
911401525844	DN390B LED7/865 PSU D100 AL WP GCG2HE	5.8 W	No
911401525944	DN390B LED7/840 PSU D100 AL WP GCG2HE	5.8 W	No
911401526044	DN390B LED7/830 PSU D100 AL WP GCG2HE	5.8 W	No
911401533344	DN391B LED14/865 P11PSU D100 AL GMG2HE	11.4 W	No
911401533444	DN391B LED14/840 P11PSU D100 AL GMG2HE	11.4 W	No
911401533544	DN391B LED14/830 P11PSU D100 AL GMG2HE	11.4 W	No
911401533944	DN391B LED14/865 PSU D100 AL GCG2HE	11.4 W	No
911401534044	DN391B LED14/840 PSU D100 AL GCG2HE	11.4 W	No
911401534144	DN391B LED14/830 PSU D100 AL GCG2HE	11.4 W	No
911401534544	DN391B LED12/865 P10PSU D100 AL GMG2HE	9.8 W	No
911401534644	DN391B LED12/840 P10PSU D100 AL GMG2HE	9.8 W	No
911401534744	DN391B LED12/830 P10PSU D100 AL GMG2HE	9.8 W	No
911401535144	DN391B LED12/865 PSU D100 AL GCG2HE	9.8 W	No
911401535244	DN391B LED12/840 PSU D100 AL GCG2HE	9.8 W	No
911401535444	DN391B LED12/830 PSU D100 AL GCG2HE	9.8 W	No
911401535844	DN390B LED7/865 P6PSU D100 AL GMG2HE	5.8 W	No
911401535944	DN390B LED7/840 P6PSU D100 AL GMG2HE	5.8 W	No
911401536044	DN390B LED7/830 P6PSU D100 AL GMG2HE	5.8 W	No
911401536444	DN390B LED7/865 PSU D100 AL GCG2HE	5.8 W	No
911401536544	DN390B LED7/840 PSU D100 AL GCG2HE	5.8 W	No

Order Code	Full Product Name	Power Consumption	Suitable for random switching
911401536644	DN390B LED7/830 PSU D100 AL GCG2HE	5.8 W	No
911401537444	DN391X LED14/865 P12WIA D100 AL G2HE	12 W	No
911401538044	DN391X LED14/830 P12WIA D100 AL G2HE	12 W	No
911401538644	DN391X LED14/840 P12WIA D100 AL G2HE	12 W	No
911401570144	DN391B LED14/865 P12PSD D100 ALWP GMG2HE	12 W	No
911401570244	DN391B LED14/840 P12PSD D100 ALWP GMG2HE	12 W	No
911401570344	DN391B LED14/830 P12PSD D100 ALWP GMG2HE	12 W	No
911401570444	DN391B LED14/865 PSD D100 AL WP GCG2HE	12 W	No
911401570544	DN391B LED14/840 PSD D100 AL WP GCG2HE	12 W	No
911401570644	DN391B LED14/830 PSD D100 AL WP GCG2HE	12 W	No
911401570744	DN391B LED12/865 P10PSD D100 ALWP GMG2HE	10.2 W	No
911401570844	DN391B LED12/840 P10PSD D100 ALWP GMG2HE	10.2 W	No
911401570944	DN391B LED12/830 P10PSD D100 ALWP GMG2HE	10.2 W	No
911401571044	DN391B LED12/865 PSD D100 AL WP GCG2HE	10.2 W	No
911401571144	DN391B LED12/840 PSD D100 AL WP GCG2HE	10.2 W	No
911401571244	DN391B LED12/830 PSD D100 AL WP GCG2HE	10.2 W	No
911401577944	DN391B LED14/865 P12PSD D100 AL GMG2HE	12 W	No
911401578044	DN391B LED14/840 P12PSD D100 AL GMG2HE	12 W	No
911401578144	DN391B LED14/830 P12PSD D100 AL GMG2HE	12 W	No
911401578544	DN391B LED14/865 PSD D100 AL GCG2HE	12 W	No
911401578644	DN391B LED14/840 PSD D100 AL GCG2HE	12 W	No
911401578744	DN391B LED14/830 PSD D100 AL GCG2HE	12 W	No
911401579144	DN391B LED12/865 P10PSD D100 AL GMG2HE	10.2 W	No
911401579244	DN391B LED12/840 P10PSD D100 AL GMG2HE	10.2 W	No
911401579344	DN391B LED12/830 P10PSD D100 AL GMG2HE	10.2 W	No
911401579744	DN391B LED12/865 PSD D100 AL GCG2HE	10.2 W	No
911401579944	DN391B LED12/830 PSD D100 AL GCG2HE	10.2 W	No
911401503845	DN394X LED34/9TNW P27PSD D200 WH WP G2	27 W	Yes
911401504145	DN394X LED34/9TNW P27PSD D200 WH WPCAUG2	27 W	Yes
911401519944	DN393B LED26/840 P20PSU D200WHWP CAUG2HE	19.9 W	No
911401520344	DN393B LED26/840 P20PSU D200 WH CAUG2HE	19.9 W	No
911401526444	DN394B LED40/865 P29PSU D200 WH GMG2HE	29.3 W	No
911401526544	DN394B LED40/840 P29PSU D200 WH GMG2HE	29.3 W	No
911401526644	DN394B LED40/830 P29PSU D200 WH GMG2HE	29.3 W	No
911401527044	DN394B LED40/865 PSU D200 WH GCG2HE	29.3 W	No
911401527144	DN394B LED40/840 PSU D200 WH GCG2HE	29.3 W	No
911401527244	DN394B LED40/830 PSU D200 WH GCG2HE	29.3 W	No
911401527644	DN393B LED26/865 P19PSU D200 WH GMG2HE	19.2 W	No
911401527744	DN393B LED26/840 P19PSU D200 WH GMG2HE	19.2 W	No
911401527844	DN393B LED26/830 P19PSU D200 WH GMG2HE	19.2 W	No
911401528244	DN393B LED26/865 PSU D200 WH GCG2HE	19.2 W	No
911401528344	DN393B LED26/840 PSU D200 WH GCG2HE	19.2 W	No

Order Code	Full Product Name	Power Consumption	Suitable for random switching
911401528444	DN393B LED26/830 PSU D200 WH GCG2HE	19.2 W	No
911401530044	DN392B LED20/865 P14PSU D200 WH GMG2HE	14.4 W	No
911401530144	DN392B LED20/840 P14PSU D200 WH GMG2HE	14.4 W	No
911401530244	DN392B LED20/830 P14PSU D200 WH GMG2HE	14.4 W	No
911401530644	DN392B LED20/865 PSU D200 WH GCG2HE	14.4 W	No
911401530744	DN392B LED20/840 PSU D200 WH GCG2HE	14.4 W	No
911401530844	DN392B LED20/830 PSU D200 WH GCG2HE	14.4 W	No
911401537144	DN393X LED26/865 P20WIA D200 WH G2HE	19.9 W	No
911401537744	DN393X LED26/830 P20WIA D200 WH G2HE	19.9 W	No
911401538344	DN393X LED26/840 P20WIA D200 WH G2HE	19.9 W	No
911401571644	DN394B LED40/865 P29PSD D200 WH GMG2HE	29.3 W	No
911401571744	DN394B LED40/840 P29PSD D200 WH GMG2HE	29.3 W	No
911401571844	DN394B LED40/830 P29PSD D200 WH GMG2HE	29.3 W	No
911401572244	DN394B LED40/865 PSD D200 WH GCG2HE	29.3 W	No
911401572344	DN394B LED40/840 PSD D200 WH GCG2HE	29.3 W	No
911401572444	DN394B LED40/830 PSD D200 WH GCG2HE	29.3 W	No
911401572844	DN393B LED26/865 P20PSD D200 WH GMG2HE	19.9 W	No
911401572944	DN393B LED26/840 P20PSD D200 WH GMG2HE	19.9 W	No
911401573044	DN393B LED26/830 P20PSD D200 WH GMG2HE	19.9 W	No
911401573444	DN393B LED26/865 PSD D200 WH GCG2HE	19.9 W	No
911401573544	DN393B LED26/840 PSD D200 WH GCG2HE	19.9 W	No
911401573644	DN393B LED26/830 PSD D200 WH GCG2HE	19.9 W	No
911401575244	DN392B LED18/865 P14PSD D200 WH GMG2HE	14.2 W	No
911401575344	DN392B LED18/840 P14PSD D200 WH GMG2HE	14.2 W	No
911401575444	DN392B LED18/830 P14PSD D200 WH GMG2HE	14.2 W	No
911401575844	DN392B LED18/865 PSD D200 WH GCG2HE	14.2 W	No
911401575944	DN392B LED18/840 PSD D200 WH GCG2HE	14.2 W	No
911401576044	DN392B LED18/830 PSD D200 WH GCG2HE	14.2 W	No
911401586932	DN393B LED22/840 P20PSU D200 WH CAUG2	19.9 W	No
911401588632	DN393B LED22/840 P20PSU D200 WH WP CAUG2	19.9 W	No
911401539144	DN394X LED40/840 L1W D200 WH GCG2HE	29.3 W	No
911401539344	DN393X LED26/840 L1W D200 WH GCG2HE	19.9 W	No
911401540144	DN394X LED40/840 P29L1W D200 WH GMG2HE	29.3 W	No
911401540344	DN393X LED26/840 P20L1W D200 WH GMG2HE	19.9 W	No
911401503545	DN394X LED33/9TNW P27PSD D200 AL WP G2	27 W	Yes
911401520744	DN394B LED38/865 P29PSU D200 ALWP GMG2HE	29.3 W	No
911401520844	DN394B LED38/840 P29PSU D200 ALWP GMG2HE	29.3 W	No
911401520944	DN394B LED38/830 P29PSU D200 ALWP GMG2HE	29.3 W	No
911401521044	DN394B LED38/865 PSU D200 AL WP GCG2HE	29.3 W	No
911401521144	DN394B LED38/840 PSU D200 AL WP GCG2HE	29.3 W	No
911401521244	DN394B LED38/830 PSU D200 AL WP GCG2HE	29.3 W	No
911401521344	DN393B LED25/865 P19PSU D200 ALWP GMG2HE	19.2 W	No

Order Code	Full Product Name	Power Consumption	Suitable for random switching
911401521444	DN393B LED25/840 P19PSU D200 ALWP GMG2HE	19.2 W	No
911401521544	DN393B LED25/830 P19PSU D200 ALWP GMG2HE	19.2 W	No
911401521644	DN393B LED25/865 PSU D200 AL WP GCG2HE	19.2 W	No
911401521744	DN393B LED25/840 PSU D200 AL WP GCG2HE	19.2 W	No
911401521844	DN393B LED25/830 PSU D200 AL WP GCG2HE	19.2 W	No
911401522544	DN392B LED18/865 P14PSU D200 ALWP GMG2HE	14.4 W	No
911401522644	DN392B LED18/840 P14PSU D200 ALWP GMG2HE	14.4 W	No
911401522744	DN392B LED18/830 P14PSU D200 ALWP GMG2HE	14.4 W	No
911401522844	DN392B LED18/865 PSU D200 AL WP GCG2HE	14.4 W	No
911401522944	DN392B LED18/840 PSU D200 AL WP GCG2HE	14.4 W	No
911401523044	DN392B LED18/830 PSU D200 AL WP GCG2HE	14.4 W	No
911401526144	DN394B LED38/865 P29PSU D200 AL GMG2HE	29.3 W	No
911401526244	DN394B LED38/840 P29PSU D200 AL GMG2HE	29.3 W	No
911401526344	DN394B LED38/830 P29PSU D200 AL GMG2HE	29.3 W	No
911401526744	DN394B LED38/865 PSU D200 AL GCG2HE	29.3 W	No
911401526844	DN394B LED38/840 PSU D200 AL GCG2HE	29.3 W	No
911401526944	DN394B LED38/830 PSU D200 AL GCG2HE	29.3 W	No
911401527344	DN393B LED25/865 P19PSU D200 AL GMG2HE	19.2 W	No
911401527444	DN393B LED25/840 P19PSU D200 AL GMG2HE	19.2 W	No
911401527544	DN393B LED25/830 P19PSU D200 AL GMG2HE	19.2 W	No
911401527944	DN393B LED25/865 PSU D200 AL GCG2HE	19.2 W	No
911401528044	DN393B LED25/840 PSU D200 AL GCG2HE	19.2 W	No
911401528144	DN393B LED25/830 PSU D200 AL GCG2HE	19.2 W	No
911401529744	DN392B LED18/865 P14PSU D200 AL GMG2HE	14.4 W	No
911401529844	DN392B LED18/840 P14PSU D200 AL GMG2HE	14.4 W	No
911401529944	DN392B LED18/830 P14PSU D200 AL GMG2HE	14.4 W	No
911401530344	DN392B LED18/865 PSU D200 AL GCG2HE	14.4 W	No
911401530444	DN392B LED18/840 PSU D200 AL GCG2HE	14.4 W	No
911401530544	DN392B LED18/830 PSU D200 AL GCG2HE	14.4 W	No
911401537044	DN393X LED25/865 P20WIA D200 AL G2HE	19.9 W	No
911401537644	DN393X LED25/830 P20WIA D200 AL G2HE	19.9 W	No
911401538244	DN393X LED25/840 P20WIA D200 AL G2HE	19.9 W	No
911401566844	DN394B LED38/865 P29PSD D200 ALWP GMG2HE	29.3 W	No
911401566944	DN394B LED38/840 P29PSD D200 ALWP GMG2HE	29.3 W	No
911401567044	DN394B LED38/830 P29PSD D200 ALWP GMG2HE	29.3 W	No
911401567144	DN394B LED38/865 PSD D200 AL WP GCG2HE	29.3 W	No
911401567244	DN394B LED38/840 PSD D200 AL WP GCG2HE	29.3 W	No
911401567344	DN394B LED38/830 PSD D200 AL WP GCG2HE	29.3 W	No
911401567444	DN393B LED25/865 P20PSD D200 ALWP GMG2HE	19.9 W	No
911401567544	DN393B LED25/840 P20PSD D200 ALWP GMG2HE	19.9 W	No
911401567644	DN393B LED25/830 P20PSD D200 ALWP GMG2HE	19.9 W	No
911401567744	DN393B LED25/865 PSD D200 AL WP GCG2HE	19.9 W	No

Order Code	Full Product Name	Power Consumption	Suitable for random switching
911401567844	DN393B LED25/840 PSD D200 AL WP GCG2HE	19.9 W	No
911401567944	DN393B LED25/830 PSD D200 AL WP GCG2HE	19.9 W	No
911401568644	DN392B LED18/865 P14PSD D200 ALWP GMG2HE	14.2 W	No
911401568744	DN392B LED18/840 P14PSD D200 ALWP GMG2HE	14.2 W	No
911401568844	DN392B LED18/830 P14PSD D200 ALWP GMG2HE	14.2 W	No
911401568944	DN392B LED18/865 PSD D200 AL WP GCG2HE	14.2 W	No
911401569044	DN392B LED18/840 PSD D200 AL WP GCG2HE	14.2 W	No
911401569144	DN392B LED18/830 PSD D200 AL WP GCG2HE	14.2 W	No
911401571344	DN394B LED38/865 P29PSD D200 AL GMG2HE	29.3 W	No
911401571444	DN394B LED38/840 P29PSD D200 AL GMG2HE	29.3 W	No
911401571544	DN394B LED38/830 P29PSD D200 AL GMG2HE	29.3 W	No
911401571944	DN394B LED38/865 PSD D200 AL GCG2HE	29.3 W	No
911401572044	DN394B LED38/840 PSD D200 AL GCG2HE	29.3 W	No
911401572144	DN394B LED38/830 PSD D200 AL GCG2HE	29.3 W	No
911401572544	DN393B LED25/865 P20PSD D200 AL GMG2HE	19.9 W	No
911401572644	DN393B LED25/840 P20PSD D200 AL GMG2HE	19.9 W	No
911401572744	DN393B LED25/830 P20PSD D200 AL GMG2HE	19.9 W	No
911401573144	DN393B LED25/865 PSD D200 AL GCG2HE	19.9 W	No
911401573244	DN393B LED25/840 PSD D200 AL GCG2HE	19.9 W	No
911401573344	DN393B LED25/830 PSD D200 AL GCG2HE	19.9 W	No
911401574944	DN392B LED18/865 P14PSD D200 AL GMG2HE	14.2 W	No
911401575044	DN392B LED18/840 P14PSD D200 AL GMG2HE	14.2 W	No
911401575144	DN392B LED18/830 P14PSD D200 AL GMG2HE	14.2 W	No
911401575544	DN392B LED18/865 PSD D200 AL GCG2HE	14.2 W	No
911401575644	DN392B LED18/840 PSD D200 AL GCG2HE	14.2 W	No
911401575744	DN392B LED18/830 PSD D200 AL GCG2HE	14.2 W	No
911401577042	DN393X LED22/840 P20L1W D200 WH CAUG2	19.9 W	No
911401577542	DN392X LED17/840 P15L1W D150 WH CAUG2	15 W	No
911401538844	DN392X LED20/840 L1W D150 WH GCG2HE	15 W	No
911401539544	DN392X LED22/840 L1W D150 WH GCG2HE	16.6 W	No
911401539944	DN392X LED20/840 P15L1W D150 WH GMG2HE	15 W	No
911401540544	DN392X LED22/840 P17L1W D150 WH GMG2HE	16.6 W	No
911401503945	DN392X LED17/9TNW P15PSD D150 WH WP G2	15 W	Yes
911401504245	DN392X LED17/9TNW P15PSD D150 WH WPCAUG2	15 W	Yes
911401520044	DN392B LED20/840 P15PSU D150WHWP CAUG2HE	15 W	No
911401520144	DN391B LED13/840 P11PSU D150WHWP CAUG2HE	10.6 W	No
911401520444	DN392B LED20/840 P15PSU D150 WH CAUG2HE	15 W	No
911401520544	DN391B LED13/840 P11PSU D150 WH CAUG2HE	10.6 W	No
911401528844	DN392B LED22/865 P16PSU D150 WH GMG2HE	16 W	No
911401528944	DN392B LED22/840 P16PSU D150 WH GMG2HE	16 W	No
911401529044	DN392B LED22/830 P16PSU D150 WH GMG2HE	16 W	No
911401529444	DN392B LED22/865 PSU D150 WH GCG2HE	16 W	No

Order Code	Full Product Name	Power Consumption	Suitable for random switching
911401529544	DN392B LED22/840 PSU D150 WH GCG2HE	16 W	No
911401529644	DN392B LED22/830 PSU D150 WH GCG2HE	16 W	No
911401531244	DN392B LED20/865 P14PSU D150 WH GMG2HE	14.4 W	No
911401531344	DN392B LED20/840 P14PSU D150 WH GMG2HE	14.4 W	No
911401531444	DN392B LED20/830 P14PSU D150 WH GMG2HE	14.4 W	No
911401531844	DN392B LED20/865 PSU D150 WH GCG2HE	14.4 W	No
911401531944	DN392B LED20/840 PSU D150 WH GCG2HE	14.4 W	No
911401532044	DN392B LED20/830 PSU D150 WH GCG2HE	14.4 W	No
911401532444	DN391B LED13/865 P10PSU D150 WH GMG2HE	9.8 W	No
911401532544	DN391B LED13/840 P10PSU D150 WH GMG2HE	9.8 W	No
911401532644	DN391B LED13/830 P10PSU D150 WH GMG2HE	9.8 W	No
911401533044	DN391B LED13/865 PSU D150 WH GCG2HE	9.8 W	No
911401533144	DN391B LED13/840 PSU D150 WH GCG2HE	9.8 W	No
911401533244	DN391B LED13/830 PSU D150 WH GCG2HE	9.8 W	No
911401537344	DN392X LED20/865 P15WIA D150 WH G2HE	15 W	No
911401537944	DN392X LED20/830 P15WIA D150 WH G2HE	15 W	No
911401538544	DN392X LED20/840 P15WIA D150 WH G2HE	15 W	No
911401566544	DN392B LED19/865 P14PSD D150 WH GMG2HE	13.4 W	No
911401566644	DN392B LED19/840 P14PSD D150 WH GMG2HE	13.4 W	No
911401566744	DN392B LED19/830 P14PSD D150 WH GMG2HE	13.4 W	No
911401574044	DN392B LED23/865 P17PSD D150 WH GMG2HE	17.3 W	No
911401574144	DN392B LED23/840 P17PSD D150 WH GMG2HE	17.3 W	No
911401574244	DN392B LED23/830 P17PSD D150 WH GMG2HE	17.3 W	No
911401574644	DN392B LED23/865 PSD D150 WH GCG2HE	17.3 W	No
911401574744	DN392B LED23/840 PSD D150 WH GCG2HE	17.3 W	No
911401574844	DN392B LED23/830 PSD D150 WH GCG2HE	17.3 W	No
911401576444	DN392B LED19/865 PSD D150 WH GCG2HE	13.4 W	No
911401576544	DN392B LED19/840 PSD D150 WH GCG2HE	13.4 W	No
911401576644	DN392B LED19/830 PSD D150 WH GCG2HE	13.4 W	No
911401577044	DN391B LED13/865 P11PSD D150 WH GMG2HE	10.6 W	No
911401577144	DN391B LED13/840 P11PSD D150 WH GMG2HE	10.6 W	No
911401577244	DN391B LED13/830 P11PSD D150 WH GMG2HE	10.6 W	No
911401577644	DN391B LED13/865 PSD D150 WH GCG2HE	10.6 W	No
911401577744	DN391B LED13/840 PSD D150 WH GCG2HE	10.6 W	No
911401577844	DN391B LED13/830 PSD D150 WH GCG2HE	10.6 W	No
911401585532	DN391B LED11/840 P11PSU D150 WH CAUG2	10.6 W	No
911401587832	DN391B LED11/840 P11PSU D150 WH WP CAUG2	10.6 W	No
911401587932	DN392B LED17/840 P15PSU D150 WH WP CAUG2	15 W	No
911401538944	DN392X LED18/840 L1W D150 AL GCG2HE	15 W	No
911401539444	DN392X LED20/840 L1W D150 AL GCG2HE	16.6 W	No
911401539844	DN392X LED18/840 P15L1W D150 AL GMG2HE	15 W	No
911401540444	DN392X LED20/840 P17L1W D150 AL GMG2HE	16.6 W	No

Controls and Dimming

Order Code	Full Product Name	Dimmable	Maximum dim level
911401539044	DN394X LED38/840 L1W D200 AL GCG2HE	DALI	1%
911401539244	DN393X LED25/840 L1W D200 AL GCG2HE	DALI	1%
911401540044	DN394X LED38/840 P29L1W D200 AL GMG2HE	DALI	1%
911401540244	DN393X LED25/840 P20L1W D200 AL GMG2HE	DALI	1%
911401504045	DN391X LED8/9TNW P7PSD D100 WH WP G2	DALI	1%
911401504345	DN391X LED8/9TNW P7PSD D100 WH WPCAUG2	DALI	1%
911401520244	DN390B LED7/840 P6PSU D100WHWP CAUG2HE	No	Not applicable
911401520644	DN390B LED7/840 P6PSU D100 WH CAUG2HE	No	Not applicable
911401533644	DN391B LED15/865 P11PSU D100 WH GMG2HE	No	Not applicable
911401533744	DN391B LED15/840 P11PSU D100 WH GMG2HE	No	Not applicable
911401533844	DN391B LED15/830 P11PSU D100 WH GMG2HE	No	Not applicable
911401534244	DN391B LED15/865 PSU D100 WH GCG2HE	No	Not applicable
911401534344	DN391B LED15/840 PSU D100 WH GCG2HE	No	Not applicable
911401534444	DN391B LED15/830 PSU D100 WH GCG2HE	No	Not applicable
911401534844	DN391B LED12/865 P10PSU D100 WH GMG2HE	No	Not applicable
911401534944	DN391B LED12/840 P10PSU D100 WH GMG2HE	No	Not applicable
911401535044	DN391B LED12/830 P10PSU D100 WH GMG2HE	No	Not applicable
911401535544	DN391B LED12/865 PSU D100 WH GCG2HE	No	Not applicable
911401535644	DN391B LED12/840 PSU D100 WH GCG2HE	No	Not applicable
911401535744	DN391B LED12/830 PSU D100 WH GCG2HE	No	Not applicable
911401536144	DN390B LED7/865 P6PSU D100 WH GMG2HE	No	Not applicable
911401536244	DN390B LED7/840 P6PSU D100 WH GMG2HE	No	Not applicable
911401536344	DN390B LED7/830 P6PSU D100 WH GMG2HE	No	Not applicable
911401536744	DN390B LED7/865 PSU D100 WH GCG2HE	No	Not applicable
911401536844	DN390B LED7/840 PSU D100 WH GCG2HE	No	Not applicable
911401536944	DN390B LED7/830 PSU D100 WH GCG2HE	No	Not applicable
911401537544	DN391X LED15/865 P12WIA D100 WH G2HE	DALI	1%
911401538144	DN391X LED15/830 P12WIA D100 WH G2HE	DALI	1%
911401538744	DN391X LED15/840 P12WIA D100WH G2HE	DALI	1%
911401578244	DN391B LED15/865 P12PSD D100 WH GMG2HE	DALI	1%
911401578344	DN391B LED15/840 P12PSD D100 WH GMG2HE	DALI	1%
911401578444	DN391B LED15/830 P12PSD D100 WH GMG2HE	DALI	1%
911401578844	DN391B LED15/865 PSD D100 WH GCG2HE	DALI	1%
911401578944	DN391B LED15/840 PSD D100 WH GCG2HE	DALI	1%
911401579044	DN391B LED15/830 PSD D100 WH GCG2HE	DALI	1%
911401579444	DN391B LED12/865 P10PSD D100 WH GMG2HE	DALI	1%
911401579544	DN391B LED12/840 P10PSD D100 WH GMG2HE	DALI	1%
911401579644	DN391B LED12/830 P10PSD D100 WH GMG2HE	DALI	1%
911401580044	DN391B LED12/865 PSD D100 WH GCG2HE	DALI	1%
911401580144	DN391B LED12/840 PSD D100 WH GCG2HE	DALI	1%
911401580244	DN391B LED12/830 PSD D100 WH GCG2HE	DALI	1%

Order Code	Full Product Name	Dimmable	Maximum dim level
911401539644	DN391X LED14/840 L1W D100 AL GCG2HE	DALI	1%
911401540644	DN391X LED14/840 P11L1W D100 AL GMG2HE	DALI	1%
911401503645	DN392X LED16/9TNW P15PSD D150 AL WP G2	DALI	1%
911401521944	DN392B LED20/865 P16PSU D150 ALWP GMG2HE	No	Not applicable
911401522044	DN392B LED20/840 P16PSU D150 ALWP GMG2HE	No	Not applicable
911401522144	DN392B LED20/830 P16PSU D150 ALWP GMG2HE	No	Not applicable
911401522244	DN392B LED20/865 PSU D150 AL WP GCG2HE	No	Not applicable
911401522344	DN392B LED20/840 PSU D150 AL WP GCG2HE	No	Not applicable
911401522444	DN392B LED20/830 PSU D150 AL WP GCG2HE	No	Not applicable
911401523144	DN392B LED18/865 P14PSU D150 ALWP GMG2HE	No	Not applicable
911401523244	DN392B LED18/840 P14PSU D150 ALWP GMG2HE	No	Not applicable
911401523344	DN392B LED18/830 P14PSU D150 ALWP GMG2HE	No	Not applicable
911401523444	DN392B LED18/865 PSU D150 AL WP GCG2HE	No	Not applicable
911401523544	DN392B LED18/840 PSU D150 AL WP GCG2HE	No	Not applicable
911401523644	DN392B LED18/830 PSU D150 AL WP GCG2HE	No	Not applicable
911401523744	DN391B LED12/865 P10PSU D150 ALWP GMG2HE	No	Not applicable
911401523844	DN391B LED12/840 P10PSU D150 ALWP GMG2HE	No	Not applicable
911401523944	DN391B LED12/830 P10PSU D150 ALWP GMG2HE	No	Not applicable
911401524044	DN391B LED12/865 PSU D150 AL WP GCG2HE	No	Not applicable
911401524144	DN391B LED12/840 PSU D150 AL WP GCG2HE	No	Not applicable
911401524244	DN391B LED12/830 PSU D150 AL WP GCG2HE	No	Not applicable
911401528544	DN392B LED20/865 P16PSU D150 AL GMG2HE	No	Not applicable
911401528644	DN392B LED20/840 P16PSU D150 AL GMG2HE	No	Not applicable
911401528744	DN392B LED20/830 P16PSU D150 AL GMG2HE	No	Not applicable
911401529144	DN392B LED20/865 PSU D150 AL GCG2HE	No	Not applicable
911401529244	DN392B LED20/840 PSU D150 AL GCG2HE	No	Not applicable
911401529344	DN392B LED20/830 PSU D150 AL GCG2HE	No	Not applicable
911401530944	DN392B LED18/865 P14PSU D150 AL GMG2HE	No	Not applicable
911401531044	DN392B LED18/840 P14PSU D150 AL GMG2HE	No	Not applicable
911401531144	DN392B LED18/830 P14PSU D150 AL GMG2HE	No	Not applicable
911401531544	DN392B LED18/865 PSU D150 AL GCG2HE	No	Not applicable
911401531644	DN392B LED18/840 PSU D150 AL GCG2HE	No	Not applicable
911401531744	DN392B LED18/830 PSU D150 AL GCG2HE	No	Not applicable
911401532144	DN391B LED12/865 P10PSU D150 AL GMG2HE	No	Not applicable
911401532244	DN391B LED12/840 P10PSU D150 AL GMG2HE	No	Not applicable
911401532344	DN391B LED12/830 P10PSU D150 AL GMG2HE	No	Not applicable
911401532744	DN391B LED12/865 PSU D150 AL GCG2HE	No	Not applicable
911401532844	DN391B LED12/840 PSU D150 AL GCG2HE	No	Not applicable
911401532944	DN391B LED13/830 PSU D150 AL GCG2HE	No	Not applicable
911401537244	DN392X LED18/865 P15WIA D150 AL G2HE	DALI	1%
911401537844	DN392X LED18/830 P15WIA D150 AL G2HE	DALI	1%
911401538444	DN392X LED18/840 P15WIA D150 AL G2HE	DALI	1%

Order Code	Full Product Name	Dimmable	Maximum dim level
911401565944	DN392B LED18/865 P14PSD D150 ALWP GMG2HE	DALI	1%
911401566044	DN392B LED18/840 P14PSD D150 ALWP GMG2HE	DALI	1%
911401566144	DN392B LED18/830 P14PSD D150 ALWP GMG2HE	DALI	1%
911401566244	DN392B LED18/865 P14PSD D150 AL GMG2HE	DALI	1%
911401566344	DN392B LED18/840 P14PSD D150 AL GMG2HE	DALI	1%
911401566444	DN392B LED18/830 P14PSD D150 AL GMG2HE	DALI	1%
911401568044	DN392B LED22/865 P17PSD D150 ALWP GMG2HE	DALI	1%
911401568144	DN392B LED22/840 P17PSD D150 ALWP GMG2HE	DALI	1%
911401568244	DN392B LED22/830 P17PSD D150 ALWP GMG2HE	DALI	1%
911401568344	DN392B LED22/865 PSD D150 AL WP GCG2HE	DALI	1%
911401568444	DN392B LED22/840 PSD D150 AL WP GCG2HE	DALI	1%
911401568544	DN392B LED22/830 PSD D150 AL WP GCG2HE	DALI	1%
911401569244	DN392B LED18/865 PSD D150 AL WP GCG2HE	DALI	1%
911401569344	DN392B LED18/840 PSD D150 AL WP GCG2HE	DALI	1%
911401569444	DN392B LED18/830 PSD D150 AL WP GCG2HE	DALI	1%
911401569544	DN391B LED12/865 P11PSD D150 ALWP GMG2HE	DALI	1%
911401569644	DN391B LED12/840 P11PSD D150 ALWP GMG2HE	DALI	1%
911401569744	DN391B LED12/830 P11PSD D150 ALWP GMG2HE	DALI	1%
911401569844	DN391B LED12/865 PSD D150 AL WP GCG2HE	DALI	1%
911401569944	DN391B LED12/840 PSD D150 AL WP GCG2HE	DALI	1%
911401570044	DN391B LED12/830 PSD D150 AL WP GCG2HE	DALI	1%
911401573744	DN392B LED22/865 P17PSD D150 AL GMG2HE	DALI	1%
911401573844	DN392B LED22/840 P17PSD D150 AL GMG2HE	DALI	1%
911401573944	DN392B LED22/830 P17PSD D150 AL GMG2HE	DALI	1%
911401574344	DN392B LED22/865 PSD D150 AL GCG2HE	DALI	1%
911401574444	DN392B LED22/840 PSD D150 AL GCG2HE	DALI	1%
911401574544	DN392B LED22/830 PSD D150 AL GCG2HE	DALI	1%
911401576144	DN392B LED18/865 PSD D150 AL GCG2HE	DALI	1%
911401576244	DN392B LED18/840 PSD D150 AL GCG2HE	DALI	1%
911401576344	DN392B LED18/830 PSD D150 AL GCG2HE	DALI	1%
911401576744	DN391B LED12/865 P11PSD D150 AL GMG2HE	DALI	1%
911401576844	DN391B LED12/840 P11PSD D150 AL GMG2HE	DALI	1%
911401576944	DN391B LED12/830 P11PSD D150 AL GMG2HE	DALI	1%
911401577344	DN391B LED12/865 PSD D150 AL GCG2HE	DALI	1%
911401577444	DN391B LED12/840 PSD D150 AL GCG2HE	DALI	1%
911401577544	DN391B LED12/830 PSD D150 AL GCG2HE	DALI	1%
911401539744	DN391X LED15/840 L1W D100 WH GCG2HE	DALI	1%
911401540744	DN391X LED15/840 P11L1W D100 WH GMG2HE	DALI	1%
911401577142	DN393X LED22/840 P20L1W D200 AL CAUG2	No	1%
911401577442	DN392X LED17/840 P15L1W D150 AL CAUG2	No	1%
911401503745	DN391X LED7/9TNW P7PSD D100 AL WP G2	DALI	1%
911401524344	DN391B LED14/865 P11PSU D100 ALWP GMG2HE	No	Not applicable

Order Code	Full Product Name	Dimmable	Maximum dim level
911401524444	DN391B LED14/840 P11PSU D100 ALWP GMG2HE	No	Not applicable
911401524544	DN391B LED14/830 P11PSU D100 ALWP GMG2HE	No	Not applicable
911401524644	DN391B LED14/865 PSU D100 AL WP GCG2HE	No	Not applicable
911401524744	DN391B LED14/840 PSU D100 AL WP GCG2HE	No	Not applicable
911401524844	DN391B LED14/830 PSU D100 AL WP GCG2HE	No	Not applicable
911401524944	DN391B LED12/865 P10PSU D100 ALWP GMG2HE	No	Not applicable
911401525044	DN391B LED12/840 P10PSU D100 ALWP GMG2HE	No	Not applicable
911401525144	DN391B LED12/830 P10PSU D100 ALWP GMG2HE	No	Not applicable
911401525244	DN391B LED12/865 PSU D100 AL WP GCG2HE	No	Not applicable
911401525344	DN391B LED12/840 PSU D100 AL WP GCG2HE	No	Not applicable
911401525444	DN391B LED12/830 PSU D100 AL WP GCG2HE	No	Not applicable
911401525544	DN390B LED7/865 P6PSU D100 AL WP GMG2HE	No	Not applicable
911401525644	DN390B LED7/840 P6PSU D100 AL WP GMG2HE	No	Not applicable
911401525744	DN390B LED7/830 P6PSU D100 AL WP GMG2HE	No	Not applicable
911401525844	DN390B LED7/865 PSU D100 AL WP GCG2HE	No	Not applicable
911401525944	DN390B LED7/840 PSU D100 AL WP GCG2HE	No	Not applicable
911401526044	DN390B LED7/830 PSU D100 AL WP GCG2HE	No	Not applicable
911401533344	DN391B LED14/865 P11PSU D100 AL GMG2HE	No	Not applicable
911401533444	DN391B LED14/840 P11PSU D100 AL GMG2HE	No	Not applicable
911401533544	DN391B LED14/830 P11PSU D100 AL GMG2HE	No	Not applicable
911401533944	DN391B LED14/865 PSU D100 AL GCG2HE	No	Not applicable
911401534044	DN391B LED14/840 PSU D100 AL GCG2HE	No	Not applicable
911401534144	DN391B LED14/830 PSU D100 AL GCG2HE	No	Not applicable
911401534544	DN391B LED12/865 P10PSU D100 AL GMG2HE	No	Not applicable
911401534644	DN391B LED12/840 P10PSU D100 AL GMG2HE	No	Not applicable
911401534744	DN391B LED12/830 P10PSU D100 AL GMG2HE	No	Not applicable
911401535144	DN391B LED12/865 PSU D100 AL GCG2HE	No	Not applicable
911401535244	DN391B LED12/840 PSU D100 AL GCG2HE	No	Not applicable
911401535444	DN391B LED12/830 PSU D100 AL GCG2HE	No	Not applicable
911401535844	DN390B LED7/865 P6PSU D100 AL GMG2HE	No	Not applicable
911401535944	DN390B LED7/840 P6PSU D100 AL GMG2HE	No	Not applicable
911401536044	DN390B LED7/830 P6PSU D100 AL GMG2HE	No	Not applicable
911401536444	DN390B LED7/865 PSU D100 AL GCG2HE	No	Not applicable
911401536544	DN390B LED7/840 PSU D100 AL GCG2HE	No	Not applicable
911401536644	DN390B LED7/830 PSU D100 AL GCG2HE	No	Not applicable
911401537444	DN391X LED14/865 P12WIA D100 AL G2HE	DALI	1%
911401538044	DN391X LED14/830 P12WIA D100 AL G2HE	DALI	1%
911401538644	DN391X LED14/840 P12WIA D100 AL G2HE	DALI	1%
911401570144	DN391B LED14/865 P12PSD D100 ALWP GMG2HE	DALI	1%
911401570244	DN391B LED14/840 P12PSD D100 ALWP GMG2HE	DALI	1%
911401570344	DN391B LED14/830 P12PSD D100 ALWP GMG2HE	DALI	1%
911401570444	DN391B LED14/865 PSD D100 AL WP GCG2HE	DALI	1%

Order Code	Full Product Name	Dimmable	Maximum dim level
911401570544	DN391B LED14/840 PSD D100 AL WP GCG2HE	DALI	1%
911401570644	DN391B LED14/830 PSD D100 AL WP GCG2HE	DALI	1%
911401570744	DN391B LED12/865 P10PSD D100 ALWP GMG2HE	DALI	1%
911401570844	DN391B LED12/840 P10PSD D100 ALWP GMG2HE	DALI	1%
911401570944	DN391B LED12/830 P10PSD D100 ALWP GMG2HE	DALI	1%
911401571044	DN391B LED12/865 PSD D100 AL WP GCG2HE	DALI	1%
911401571144	DN391B LED12/840 PSD D100 AL WP GCG2HE	DALI	1%
911401571244	DN391B LED12/830 PSD D100 AL WP GCG2HE	DALI	1%
911401577944	DN391B LED14/865 P12PSD D100 AL GMG2HE	DALI	1%
911401578044	DN391B LED14/840 P12PSD D100 AL GMG2HE	DALI	1%
911401578144	DN391B LED14/830 P12PSD D100 AL GMG2HE	DALI	1%
911401578544	DN391B LED14/865 PSD D100 AL GCG2HE	DALI	1%
911401578644	DN391B LED14/840 PSD D100 AL GCG2HE	DALI	1%
911401578744	DN391B LED14/830 PSD D100 AL GCG2HE	DALI	1%
911401579144	DN391B LED12/865 P10PSD D100 AL GMG2HE	DALI	1%
911401579244	DN391B LED12/840 P10PSD D100 AL GMG2HE	DALI	1%
911401579344	DN391B LED12/830 P10PSD D100 AL GMG2HE	DALI	1%
911401579744	DN391B LED12/865 PSD D100 AL GCG2HE	DALI	1%
911401579944	DN391B LED12/830 PSD D100 AL GCG2HE	DALI	1%
911401503845	DN394X LED34/9TNW P27PSD D200 WH WP G2	DALI	1%
911401504145	DN394X LED34/9TNW P27PSD D200 WH WPCAUG2	DALI	1%
911401519944	DN393B LED26/840 P20PSU D200WHWP CAUG2HE	No	Not applicable
911401520344	DN393B LED26/840 P20PSU D200 WH CAUG2HE	No	Not applicable
911401526444	DN394B LED40/865 P29PSU D200 WH GMG2HE	No	Not applicable
911401526544	DN394B LED40/840 P29PSU D200 WH GMG2HE	No	Not applicable
911401526644	DN394B LED40/830 P29PSU D200 WH GMG2HE	No	Not applicable
911401527044	DN394B LED40/865 PSU D200 WH GCG2HE	No	Not applicable
911401527144	DN394B LED40/840 PSU D200 WH GCG2HE	No	Not applicable
911401527244	DN394B LED40/830 PSU D200 WH GCG2HE	No	Not applicable
911401527644	DN393B LED26/865 P19PSU D200 WH GMG2HE	No	Not applicable
911401527744	DN393B LED26/840 P19PSU D200 WH GMG2HE	No	Not applicable
911401527844	DN393B LED26/830 P19PSU D200 WH GMG2HE	No	Not applicable
911401528244	DN393B LED26/865 PSU D200 WH GCG2HE	No	Not applicable
911401528344	DN393B LED26/840 PSU D200 WH GCG2HE	No	Not applicable
911401528444	DN393B LED26/830 PSU D200 WH GCG2HE	No	Not applicable
911401530044	DN392B LED20/865 P14PSU D200 WH GMG2HE	No	Not applicable
911401530144	DN392B LED20/840 P14PSU D200 WH GMG2HE	No	Not applicable
911401530244	DN392B LED20/830 P14PSU D200 WH GMG2HE	No	Not applicable
911401530644	DN392B LED20/865 PSU D200 WH GCG2HE	No	Not applicable
911401530744	DN392B LED20/840 PSU D200 WH GCG2HE	No	Not applicable
911401530844	DN392B LED20/830 PSU D200 WH GCG2HE	No	Not applicable
911401537144	DN393X LED26/865 P20WIA D200 WH G2HE	DALI	1%

Order Code	Full Product Name	Dimmable	Maximum dim level
911401537744	DN393X LED26/830 P20WIA D200 WH G2HE	DALI	1%
911401538344	DN393X LED26/840 P20WIA D200 WH G2HE	DALI	1%
911401571644	DN394B LED40/865 P29PSD D200 WH GMG2HE	DALI	1%
911401571744	DN394B LED40/840 P29PSD D200 WH GMG2HE	DALI	1%
911401571844	DN394B LED40/830 P29PSD D200 WH GMG2HE	DALI	1%
911401572244	DN394B LED40/865 PSD D200 WH GCG2HE	DALI	1%
911401572344	DN394B LED40/840 PSD D200 WH GCG2HE	DALI	1%
911401572444	DN394B LED40/830 PSD D200 WH GCG2HE	DALI	1%
911401572844	DN393B LED26/865 P20PSD D200 WH GMG2HE	DALI	1%
911401572944	DN393B LED26/840 P20PSD D200 WH GMG2HE	DALI	1%
911401573044	DN393B LED26/830 P20PSD D200 WH GMG2HE	DALI	1%
911401573444	DN393B LED26/865 PSD D200 WH GCG2HE	DALI	1%
911401573544	DN393B LED26/840 PSD D200 WH GCG2HE	DALI	1%
911401573644	DN393B LED26/830 PSD D200 WH GCG2HE	DALI	1%
911401575244	DN392B LED18/865 P14PSD D200 WH GMG2HE	DALI	1%
911401575344	DN392B LED18/840 P14PSD D200 WH GMG2HE	DALI	1%
911401575444	DN392B LED18/830 P14PSD D200 WH GMG2HE	DALI	1%
911401575844	DN392B LED18/865 PSD D200 WH GCG2HE	DALI	1%
911401575944	DN392B LED18/840 PSD D200 WH GCG2HE	DALI	1%
911401576044	DN392B LED18/830 PSD D200 WH GCG2HE	DALI	1%
911401586932	DN393B LED22/840 P20PSU D200 WH CAUG2	No	Not applicable
911401588632	DN393B LED22/840 P20PSU D200 WH WP CAUG2	No	Not applicable
911401539144	DN394X LED40/840 L1W D200 WH GCG2HE	DALI	1%
911401539344	DN393X LED26/840 L1W D200 WH GCG2HE	DALI	1%
911401540144	DN394X LED40/840 P29L1W D200 WH GMG2HE	DALI	1%
911401540344	DN393X LED26/840 P20L1W D200 WH GMG2HE	DALI	1%
911401503545	DN394X LED33/9TNW P27PSD D200 AL WP G2	DALI	1%
911401520744	DN394B LED38/865 P29PSU D200 ALWP GMG2HE	No	Not applicable
911401520844	DN394B LED38/840 P29PSU D200 ALWP GMG2HE	No	Not applicable
911401520944	DN394B LED38/830 P29PSU D200 ALWP GMG2HE	No	Not applicable
911401521044	DN394B LED38/865 PSU D200 AL WP GCG2HE	No	Not applicable
911401521144	DN394B LED38/840 PSU D200 AL WP GCG2HE	No	Not applicable
911401521244	DN394B LED38/830 PSU D200 AL WP GCG2HE	No	Not applicable
911401521344	DN393B LED25/865 P19PSU D200 ALWP GMG2HE	No	Not applicable
911401521444	DN393B LED25/840 P19PSU D200 ALWP GMG2HE	No	Not applicable
911401521544	DN393B LED25/830 P19PSU D200 ALWP GMG2HE	No	Not applicable
911401521644	DN393B LED25/865 PSU D200 AL WP GCG2HE	No	Not applicable
911401521744	DN393B LED25/840 PSU D200 AL WP GCG2HE	No	Not applicable
911401521844	DN393B LED25/830 PSU D200 AL WP GCG2HE	No	Not applicable
911401522544	DN392B LED18/865 P14PSU D200 ALWP GMG2HE	No	Not applicable
911401522644	DN392B LED18/840 P14PSU D200 ALWP GMG2HE	No	Not applicable
911401522744	DN392B LED18/830 P14PSU D200 ALWP GMG2HE	No	Not applicable

Order Code	Full Product Name	Dimmable	Maximum dim level
911401522844	DN392B LED18/865 PSU D200 AL WP GCG2HE	No	Not applicable
911401522944	DN392B LED18/840 PSU D200 AL WP GCG2HE	No	Not applicable
911401523044	DN392B LED18/830 PSU D200 AL WP GCG2HE	No	Not applicable
911401526144	DN394B LED38/865 P29PSU D200 AL GMG2HE	No	Not applicable
911401526244	DN394B LED38/840 P29PSU D200 AL GMG2HE	No	Not applicable
911401526344	DN394B LED38/830 P29PSU D200 AL GMG2HE	No	Not applicable
911401526744	DN394B LED38/865 PSU D200 AL GCG2HE	No	Not applicable
911401526844	DN394B LED38/840 PSU D200 AL GCG2HE	No	Not applicable
911401526944	DN394B LED38/830 PSU D200 AL GCG2HE	No	Not applicable
911401527344	DN393B LED25/865 P19PSU D200 AL GMG2HE	No	Not applicable
911401527444	DN393B LED25/840 P19PSU D200 AL GMG2HE	No	Not applicable
911401527544	DN393B LED25/830 P19PSU D200 AL GMG2HE	No	Not applicable
911401527944	DN393B LED25/865 PSU D200 AL GCG2HE	No	Not applicable
911401528044	DN393B LED25/840 PSU D200 AL GCG2HE	No	Not applicable
911401528144	DN393B LED25/830 PSU D200 AL GCG2HE	No	Not applicable
911401529744	DN392B LED18/865 P14PSU D200 AL GMG2HE	No	Not applicable
911401529844	DN392B LED18/840 P14PSU D200 AL GMG2HE	No	Not applicable
911401529944	DN392B LED18/830 P14PSU D200 AL GMG2HE	No	Not applicable
911401530344	DN392B LED18/865 PSU D200 AL GCG2HE	No	Not applicable
911401530444	DN392B LED18/840 PSU D200 AL GCG2HE	No	Not applicable
911401530544	DN392B LED18/830 PSU D200 AL GCG2HE	No	Not applicable
911401537044	DN393X LED25/865 P20WIA D200 AL G2HE	DALI	1%
911401537644	DN393X LED25/830 P20WIA D200 AL G2HE	DALI	1%
911401538244	DN393X LED25/840 P20WIA D200 AL G2HE	DALI	1%
911401566844	DN394B LED38/865 P29PSD D200 ALWP GMG2HE	DALI	1%
911401566944	DN394B LED38/840 P29PSD D200 ALWP GMG2HE	DALI	1%
911401567044	DN394B LED38/830 P29PSD D200 ALWP GMG2HE	DALI	1%
911401567144	DN394B LED38/865 PSD D200 AL WP GCG2HE	DALI	1%
911401567244	DN394B LED38/840 PSD D200 AL WP GCG2HE	DALI	1%
911401567344	DN394B LED38/830 PSD D200 AL WP GCG2HE	DALI	1%
911401567444	DN393B LED25/865 P20PSD D200 ALWP GMG2HE	DALI	1%
911401567544	DN393B LED25/840 P20PSD D200 ALWP GMG2HE	DALI	1%
911401567644	DN393B LED25/830 P20PSD D200 ALWP GMG2HE	DALI	1%
911401567744	DN393B LED25/865 PSD D200 AL WP GCG2HE	DALI	1%
911401567844	DN393B LED25/840 PSD D200 AL WP GCG2HE	DALI	1%
911401567944	DN393B LED25/830 PSD D200 AL WP GCG2HE	DALI	1%
911401568644	DN392B LED18/865 P14PSD D200 ALWP GMG2HE	DALI	1%
911401568744	DN392B LED18/840 P14PSD D200 ALWP GMG2HE	DALI	1%
911401568844	DN392B LED18/830 P14PSD D200 ALWP GMG2HE	DALI	1%
911401568944	DN392B LED18/865 PSD D200 AL WP GCG2HE	DALI	1%
911401569044	DN392B LED18/840 PSD D200 AL WP GCG2HE	DALI	1%
911401569144	DN392B LED18/830 PSD D200 AL WP GCG2HE	DALI	1%

Order Code	Full Product Name	Dimmable	Maximum dim level
911401571344	DN394B LED38/865 P29PSD D200 AL GMG2HE	DALI	1%
911401571444	DN394B LED38/840 P29PSD D200 AL GMG2HE	DALI	1%
911401571544	DN394B LED38/830 P29PSD D200 AL GMG2HE	DALI	1%
911401571944	DN394B LED38/865 PSD D200 AL GCG2HE	DALI	1%
911401572044	DN394B LED38/840 PSD D200 AL GCG2HE	DALI	1%
911401572144	DN394B LED38/830 PSD D200 AL GCG2HE	DALI	1%
911401572544	DN393B LED25/865 P20PSD D200 AL GMG2HE	DALI	1%
911401572644	DN393B LED25/840 P20PSD D200 AL GMG2HE	DALI	1%
911401572744	DN393B LED25/830 P20PSD D200 AL GMG2HE	DALI	1%
911401573144	DN393B LED25/865 PSD D200 AL GCG2HE	DALI	1%
911401573244	DN393B LED25/840 PSD D200 AL GCG2HE	DALI	1%
911401573344	DN393B LED25/830 PSD D200 AL GCG2HE	DALI	1%
911401574944	DN392B LED18/865 P14PSD D200 AL GMG2HE	DALI	1%
911401575044	DN392B LED18/840 P14PSD D200 AL GMG2HE	DALI	1%
911401575144	DN392B LED18/830 P14PSD D200 AL GMG2HE	DALI	1%
911401575544	DN392B LED18/865 PSD D200 AL GCG2HE	DALI	1%
911401575644	DN392B LED18/840 PSD D200 AL GCG2HE	DALI	1%
911401575744	DN392B LED18/830 PSD D200 AL GCG2HE	DALI	1%
911401577042	DN393X LED22/840 P20L1W D200 WH CAUG2	No	1%
911401577542	DN392X LED17/840 P15L1W D150 WH CAUG2	No	1%
911401538844	DN392X LED20/840 L1W D150 WH GCG2HE	DALI	1%
911401539544	DN392X LED22/840 L1W D150 WH GCG2HE	DALI	1%
911401539944	DN392X LED20/840 P15L1W D150 WH GMG2HE	DALI	1%
911401540544	DN392X LED22/840 P17L1W D150 WH GMG2HE	DALI	1%
911401503945	DN392X LED17/9TNW P15PSD D150 WH WP G2	DALI	1%
911401504245	DN392X LED17/9TNW P15PSD D150 WH WPCAUG2	DALI	1%
911401520044	DN392B LED20/840 P15PSU D150WHWP CAUG2HE	No	Not applicable
911401520144	DN391B LED13/840 P11PSU D150WHWP CAUG2HE	No	Not applicable
911401520444	DN392B LED20/840 P15PSU D150 WH CAUG2HE	No	Not applicable
911401520544	DN391B LED13/840 P11PSU D150 WH CAUG2HE	No	Not applicable
911401528844	DN392B LED22/865 P16PSU D150 WH GMG2HE	No	Not applicable
911401528944	DN392B LED22/840 P16PSU D150 WH GMG2HE	No	Not applicable
911401529044	DN392B LED22/830 P16PSU D150 WH GMG2HE	No	Not applicable
911401529444	DN392B LED22/865 PSU D150 WH GCG2HE	No	Not applicable
911401529544	DN392B LED22/840 PSU D150 WH GCG2HE	No	Not applicable
911401529644	DN392B LED22/830 PSU D150 WH GCG2HE	No	Not applicable
911401531244	DN392B LED20/865 P14PSU D150 WH GMG2HE	No	Not applicable
911401531344	DN392B LED20/840 P14PSU D150 WH GMG2HE	No	Not applicable
911401531444	DN392B LED20/830 P14PSU D150 WH GMG2HE	No	Not applicable
911401531844	DN392B LED20/865 PSU D150 WH GCG2HE	No	Not applicable
911401531944	DN392B LED20/840 PSU D150 WH GCG2HE	No	Not applicable
911401532044	DN392B LED20/830 PSU D150 WH GCG2HE	No	Not applicable

Order Code	Full Product Name	Dimmable	Maximum dim level
911401532444	DN391B LED13/865 P10PSU D150 WH GMG2HE	No	Not applicable
911401532544	DN391B LED13/840 P10PSU D150 WH GMG2HE	No	Not applicable
911401532644	DN391B LED13/830 P10PSU D150 WH GMG2HE	No	Not applicable
911401533044	DN391B LED13/865 PSU D150 WH GCG2HE	No	Not applicable
911401533144	DN391B LED13/840 PSU D150 WH GCG2HE	No	Not applicable
911401533244	DN391B LED13/830 PSU D150 WH GCG2HE	No	Not applicable
911401537344	DN392X LED20/865 P15WIA D150 WH G2HE	DALI	1%
911401537944	DN392X LED20/830 P15WIA D150 WH G2HE	DALI	1%
911401538544	DN392X LED20/840 P15WIA D150 WH G2HE	DALI	1%
911401566544	DN392B LED19/865 P14PSD D150 WH GMG2HE	DALI	1%
911401566644	DN392B LED19/840 P14PSD D150 WH GMG2HE	DALI	1%
911401566744	DN392B LED19/830 P14PSD D150 WH GMG2HE	DALI	1%
911401574044	DN392B LED23/865 P17PSD D150 WH GMG2HE	DALI	1%
911401574144	DN392B LED23/840 P17PSD D150 WH GMG2HE	DALI	1%
911401574244	DN392B LED23/830 P17PSD D150 WH GMG2HE	DALI	1%
911401574644	DN392B LED23/865 PSD D150 WH GCG2HE	DALI	1%
911401574744	DN392B LED23/840 PSD D150 WH GCG2HE	DALI	1%
911401574844	DN392B LED23/830 PSD D150 WH GCG2HE	DALI	1%
911401576444	DN392B LED19/865 PSD D150 WH GCG2HE	DALI	1%
911401576544	DN392B LED19/840 PSD D150 WH GCG2HE	DALI	1%
911401576644	DN392B LED19/830 PSD D150 WH GCG2HE	DALI	1%
911401577044	DN391B LED13/865 P11PSD D150 WH GMG2HE	DALI	1%
911401577144	DN391B LED13/840 P11PSD D150 WH GMG2HE	DALI	1%
911401577244	DN391B LED13/830 P11PSD D150 WH GMG2HE	DALI	1%
911401577644	DN391B LED13/865 PSD D150 WH GCG2HE	DALI	1%
911401577744	DN391B LED13/840 PSD D150 WH GCG2HE	DALI	1%
911401577844	DN391B LED13/830 PSD D150 WH GCG2HE	DALI	1%
911401585532	DN391B LED11/840 P11PSU D150 WH CAUG2	No	Not applicable
911401587832	DN391B LED11/840 P11PSU D150 WH WP CAUG2	No	Not applicable
911401587932	DN392B LED17/840 P15PSU D150 WH WP CAUG2	No	Not applicable
911401538944	DN392X LED18/840 L1W D150 AL GCG2HE	DALI	1%
911401539444	DN392X LED20/840 L1W D150 AL GCG2HE	DALI	1%
911401539844	DN392X LED18/840 P15L1W D150 AL GMG2HE	DALI	1%
911401540444	DN392X LED20/840 P17L1W D150 AL GMG2HE	DALI	1%

Mechanical and Housing

Order Code	Full Product Name	Housing Color	Ingress protection code
911401539044	DN394X LED38/840 L1W D200 AL GCG2HE	Aluminum and RAL (to be defined)	IP20
911401539244	DN393X LED25/840 L1W D200 AL GCG2HE	Aluminum and RAL (to be defined)	IP20
911401540044	DN394X LED38/840 P29L1W D200 AL GMG2HE	Aluminum and RAL (to be defined)	IP20
911401540244	DN393X LED25/840 P20L1W D200 AL GMG2HE	Aluminum and RAL (to be defined)	IP20
911401504045	DN391X LED8/9TNW P7PSD D100 WH WP G2	Black	IP54

Order Code	Full Product Name	Housing Color	Ingress protection code
911401504345	DN391X LED8/9TNW P7PSD D100 WH WPCAUG2	Black	IP54
911401520244	DN390B LED7/840 P6PSU D100WHWP CAUG2HE	Aluminum	IP20/54
911401520644	DN390B LED7/840 P6PSU D100 WH CAUG2HE	Aluminum	IP20
911401533644	DN391B LED15/865 P11PSU D100 WH GMG2HE	Aluminum	IP20
911401533744	DN391B LED15/840 P11PSU D100 WH GMG2HE	Aluminum	IP20
911401533844	DN391B LED15/830 P11PSU D100 WH GMG2HE	Aluminum	IP20
911401534244	DN391B LED15/865 PSU D100 WH GCG2HE	Aluminum	IP20
911401534344	DN391B LED15/840 PSU D100 WH GCG2HE	Aluminum	IP20
911401534444	DN391B LED15/830 PSU D100 WH GCG2HE	Aluminum	IP20
911401534844	DN391B LED12/865 P10PSU D100 WH GMG2HE	Aluminum	IP20
911401534944	DN391B LED12/840 P10PSU D100 WH GMG2HE	Aluminum	IP20
911401535044	DN391B LED12/830 P10PSU D100 WH GMG2HE	Aluminum	IP20
911401535544	DN391B LED12/865 PSU D100 WH GCG2HE	Aluminum	IP20
911401535644	DN391B LED12/840 PSU D100 WH GCG2HE	Aluminum	IP20
911401535744	DN391B LED12/830 PSU D100 WH GCG2HE	Aluminum	IP20
911401536144	DN390B LED7/865 P6PSU D100 WH GMG2HE	Aluminum	IP20
911401536244	DN390B LED7/840 P6PSU D100 WH GMG2HE	Aluminum	IP20
911401536344	DN390B LED7/830 P6PSU D100 WH GMG2HE	Aluminum	IP20
911401536744	DN390B LED7/865 PSU D100 WH GCG2HE	Aluminum	IP20
911401536844	DN390B LED7/840 PSU D100 WH GCG2HE	Aluminum	IP20
911401536944	DN390B LED7/830 PSU D100 WH GCG2HE	Aluminum	IP20
911401537544	DN391X LED15/865 P12WIA D100 WH G2HE	Aluminum	IP20
911401538144	DN391X LED15/830 P12WIA D100 WH G2HE	Aluminum	IP20
911401538744	DN391X LED15/840 P12WIA D100WH G2HE	Aluminum	IP20
911401578244	DN391B LED15/865 P12PSD D100 WH GMG2HE	Aluminum and RAL (to be defined)	IP20
911401578344	DN391B LED15/840 P12PSD D100 WH GMG2HE	Aluminum and RAL (to be defined)	IP20
911401578444	DN391B LED15/830 P12PSD D100 WH GMG2HE	Aluminum and RAL (to be defined)	IP20
911401578844	DN391B LED15/865 PSD D100 WH GCG2HE	Aluminum and RAL (to be defined)	IP20
911401578944	DN391B LED15/840 PSD D100 WH GCG2HE	Aluminum and RAL (to be defined)	IP20
911401579044	DN391B LED15/830 PSD D100 WH GCG2HE	Aluminum and RAL (to be defined)	IP20
911401579444	DN391B LED12/865 P10PSD D100 WH GMG2HE	Aluminum and RAL (to be defined)	IP20
911401579544	DN391B LED12/840 P10PSD D100 WH GMG2HE	Aluminum and RAL (to be defined)	IP20
911401579644	DN391B LED12/830 P10PSD D100 WH GMG2HE	Aluminum and RAL (to be defined)	IP20
911401580044	DN391B LED12/865 PSD D100 WH GCG2HE	Aluminum and RAL (to be defined)	IP20
911401580144	DN391B LED12/840 PSD D100 WH GCG2HE	Aluminum and RAL (to be defined)	IP20
911401580244	DN391B LED12/830 PSD D100 WH GCG2HE	Aluminum and RAL (to be defined)	IP20
911401539644	DN391X LED14/840 L1W D100 AL GCG2HE	Aluminum and RAL (to be defined)	IP20
911401540644	DN391X LED14/840 P11L1W D100 AL GMG2HE	Aluminum and RAL (to be defined)	IP20
911401503645	DN392X LED16/9TNW P15PSD D150 AL WP G2	Black	IP54
911401521944	DN392B LED20/865 P16PSU D150 ALWP GMG2HE	Aluminum	IP20/54
911401522044	DN392B LED20/840 P16PSU D150 ALWP GMG2HE	Aluminum	IP20/54
911401522144	DN392B LED20/830 P16PSU D150 ALWP GMG2HE	Aluminum	IP20/54

Order Code	Full Product Name	Housing Color	Ingress protection code
911401522244	DN392B LED20/865 PSU D150 AL WP GCG2HE	Aluminum	IP20/54
911401522344	DN392B LED20/840 PSU D150 AL WP GCG2HE	Aluminum	IP20/54
911401522444	DN392B LED20/830 PSU D150 AL WP GCG2HE	Aluminum	IP20/54
911401523144	DN392B LED18/865 P14PSU D150 ALWP GMG2HE	Aluminum	IP20/54
911401523244	DN392B LED18/840 P14PSU D150 ALWP GMG2HE	Aluminum	IP20/54
911401523344	DN392B LED18/830 P14PSU D150 ALWP GMG2HE	Aluminum	IP20/54
911401523444	DN392B LED18/865 PSU D150 AL WP GCG2HE	Aluminum	IP20/54
911401523544	DN392B LED18/840 PSU D150 AL WP GCG2HE	Aluminum	IP20/54
911401523644	DN392B LED18/830 PSU D150 AL WP GCG2HE	Aluminum	IP20/54
911401523744	DN391B LED12/865 P10PSU D150 ALWP GMG2HE	Aluminum	IP20/54
911401523844	DN391B LED12/840 P10PSU D150 ALWP GMG2HE	Aluminum	IP20/54
911401523944	DN391B LED12/830 P10PSU D150 ALWP GMG2HE	Aluminum	IP20/54
911401524044	DN391B LED12/865 PSU D150 AL WP GCG2HE	Aluminum	IP20/54
911401524144	DN391B LED12/840 PSU D150 AL WP GCG2HE	Aluminum	IP20/54
911401524244	DN391B LED12/830 PSU D150 AL WP GCG2HE	Aluminum	IP20/54
911401528544	DN392B LED20/865 P16PSU D150 AL GMG2HE	Aluminum	IP20
911401528644	DN392B LED20/840 P16PSU D150 AL GMG2HE	Aluminum	IP20
911401528744	DN392B LED20/830 P16PSU D150 AL GMG2HE	Aluminum	IP20
911401529144	DN392B LED20/865 PSU D150 AL GCG2HE	Aluminum	IP20
911401529244	DN392B LED20/840 PSU D150 AL GCG2HE	Aluminum	IP20
911401529344	DN392B LED20/830 PSU D150 AL GCG2HE	Aluminum	IP20
911401530944	DN392B LED18/865 P14PSU D150 AL GMG2HE	Aluminum	IP20
911401531044	DN392B LED18/840 P14PSU D150 AL GMG2HE	Aluminum	IP20
911401531144	DN392B LED18/830 P14PSU D150 AL GMG2HE	Aluminum	IP20
911401531544	DN392B LED18/865 PSU D150 AL GCG2HE	Aluminum	IP20
911401531644	DN392B LED18/840 PSU D150 AL GCG2HE	Aluminum	IP20
911401531744	DN392B LED18/830 PSU D150 AL GCG2HE	Aluminum	IP20
911401532144	DN391B LED12/865 P10PSU D150 AL GMG2HE	Aluminum	IP20
911401532244	DN391B LED12/840 P10PSU D150 AL GMG2HE	Aluminum	IP20
911401532344	DN391B LED12/830 P10PSU D150 AL GMG2HE	Aluminum	IP20
911401532744	DN391B LED12/865 PSU D150 AL GCG2HE	Aluminum	IP20
911401532844	DN391B LED12/840 PSU D150 AL GCG2HE	Aluminum	IP20
911401532944	DN391B LED13/830 PSU D150 AL GCG2HE	Aluminum	IP20
911401537244	DN392X LED18/865 P15WIA D150 AL G2HE	Aluminum	IP20
911401537844	DN392X LED18/830 P15WIA D150 AL G2HE	Aluminum	IP20
911401538444	DN392X LED18/840 P15WIA D150 AL G2HE	Aluminum	IP20
911401565944	DN392B LED18/865 P14PSD D150 ALWP GMG2HE	Aluminum and RAL (to be defined)	IP20/54
911401566044	DN392B LED18/840 P14PSD D150 ALWP GMG2HE	Aluminum and RAL (to be defined)	IP20/54
911401566144	DN392B LED18/830 P14PSD D150 ALWP GMG2HE	Aluminum and RAL (to be defined)	IP20/54
911401566244	DN392B LED18/865 P14PSD D150 AL GMG2HE	Aluminum and RAL (to be defined)	IP20
911401566344	DN392B LED18/840 P14PSD D150 AL GMG2HE	Aluminum and RAL (to be defined)	IP20
911401566444	DN392B LED18/830 P14PSD D150 AL GMG2HE	Aluminum and RAL (to be defined)	IP20

Order Code	Full Product Name	Housing Color	Ingress protection code
911401568044	DN392B LED22/865 P17PSD D150 ALWP GMG2HE	Aluminum and RAL (to be defined)	IP20/54
911401568144	DN392B LED22/840 P17PSD D150 ALWP GMG2HE	Aluminum and RAL (to be defined)	IP20/54
911401568244	DN392B LED22/830 P17PSD D150 ALWP GMG2HE	Aluminum and RAL (to be defined)	IP20/54
911401568344	DN392B LED22/865 PSD D150 AL WP GCG2HE	Aluminum and RAL (to be defined)	IP20/54
911401568444	DN392B LED22/840 PSD D150 AL WP GCG2HE	Aluminum and RAL (to be defined)	IP20/54
911401568544	DN392B LED22/830 PSD D150 AL WP GCG2HE	Aluminum and RAL (to be defined)	IP20/54
911401569244	DN392B LED18/865 PSD D150 AL WP GCG2HE	Aluminum and RAL (to be defined)	IP20/54
911401569344	DN392B LED18/840 PSD D150 AL WP GCG2HE	Aluminum and RAL (to be defined)	IP20/54
911401569444	DN392B LED18/830 PSD D150 AL WP GCG2HE	Aluminum and RAL (to be defined)	IP20/54
911401569544	DN391B LED12/865 P11PSD D150 ALWP GMG2HE	Aluminum and RAL (to be defined)	IP20/54
911401569644	DN391B LED12/840 P11PSD D150 ALWP GMG2HE	Aluminum and RAL (to be defined)	IP20/54
911401569744	DN391B LED12/830 P11PSD D150 ALWP GMG2HE	Aluminum and RAL (to be defined)	IP20/54
911401569844	DN391B LED12/865 PSD D150 AL WP GCG2HE	Aluminum and RAL (to be defined)	IP20/54
911401569944	DN391B LED12/840 PSD D150 AL WP GCG2HE	Aluminum and RAL (to be defined)	IP20/54
911401570044	DN391B LED12/830 PSD D150 AL WP GCG2HE	Aluminum and RAL (to be defined)	IP20/54
911401573744	DN392B LED22/865 P17PSD D150 AL GMG2HE	Aluminum and RAL (to be defined)	IP20
911401573844	DN392B LED22/840 P17PSD D150 AL GMG2HE	Aluminum and RAL (to be defined)	IP20
911401573944	DN392B LED22/830 P17PSD D150 AL GMG2HE	Aluminum and RAL (to be defined)	IP20
911401574344	DN392B LED22/865 PSD D150 AL GCG2HE	Aluminum and RAL (to be defined)	IP20
911401574444	DN392B LED22/840 PSD D150 AL GCG2HE	Aluminum and RAL (to be defined)	IP20
911401574544	DN392B LED22/830 PSD D150 AL GCG2HE	Aluminum and RAL (to be defined)	IP20
911401576144	DN392B LED18/865 PSD D150 AL GCG2HE	Aluminum and RAL (to be defined)	IP20
911401576244	DN392B LED18/840 PSD D150 AL GCG2HE	Aluminum and RAL (to be defined)	IP20
911401576344	DN392B LED18/830 PSD D150 AL GCG2HE	Aluminum and RAL (to be defined)	IP20
911401576744	DN391B LED12/865 P11PSD D150 AL GMG2HE	Aluminum and RAL (to be defined)	IP20
911401576844	DN391B LED12/840 P11PSD D150 AL GMG2HE	Aluminum and RAL (to be defined)	IP20
911401576944	DN391B LED12/830 P11PSD D150 AL GMG2HE	Aluminum and RAL (to be defined)	IP20
911401577344	DN391B LED12/865 PSD D150 AL GCG2HE	Aluminum and RAL (to be defined)	IP20
911401577444	DN391B LED12/840 PSD D150 AL GCG2HE	Aluminum and RAL (to be defined)	IP20
911401577544	DN391B LED12/830 PSD D150 AL GCG2HE	Aluminum and RAL (to be defined)	IP20
911401539744	DN391X LED15/840 L1W D100 WH GCG2HE	Aluminum and RAL (to be defined)	IP20
911401540744	DN391X LED15/840 P11L1W D100 WH GMG2HE	Aluminum and RAL (to be defined)	IP20
911401577142	DN393X LED22/840 P20L1W D200 AL CAUG2	Black and white	IP20
911401577442	DN392X LED17/840 P15L1W D150 AL CAUG2	Black and white	IP20
911401503745	DN391X LED7/9TNW P7PSD D100 AL WP G2	Black	IP54
911401524344	DN391B LED14/865 P11PSU D100 ALWP GMG2HE	Aluminum	IP20/54
911401524444	DN391B LED14/840 P11PSU D100 ALWP GMG2HE	Aluminum	IP20/54
911401524544	DN391B LED14/830 P11PSU D100 ALWP GMG2HE	Aluminum	IP20/54
911401524644	DN391B LED14/865 PSU D100 AL WP GCG2HE	Aluminum	IP20/54
911401524744	DN391B LED14/840 PSU D100 AL WP GCG2HE	Aluminum	IP20/54
911401524844	DN391B LED14/830 PSU D100 AL WP GCG2HE	Aluminum	IP20/54
911401524944	DN391B LED12/865 P10PSU D100 ALWP GMG2HE	Aluminum	IP20/54

Order Code	Full Product Name	Housing Color	Ingress protection code
911401525044	DN391B LED12/840 P10PSU D100 ALWP GMG2HE	Aluminum	IP20/54
911401525144	DN391B LED12/830 P10PSU D100 ALWP GMG2HE	Aluminum	IP20/54
911401525244	DN391B LED12/865 PSU D100 AL WP GCG2HE	Aluminum	IP20/54
911401525344	DN391B LED12/840 PSU D100 AL WP GCG2HE	Aluminum	IP20/54
911401525444	DN391B LED12/830 PSU D100 AL WP GCG2HE	Aluminum	IP20/54
911401525544	DN390B LED7/865 P6PSU D100 AL WP GMG2HE	Aluminum	IP20/54
911401525644	DN390B LED7/840 P6PSU D100 AL WP GMG2HE	Aluminum	IP20/54
911401525744	DN390B LED7/830 P6PSU D100 AL WP GMG2HE	Aluminum	IP20/54
911401525844	DN390B LED7/865 PSU D100 AL WP GCG2HE	Aluminum	IP20/54
911401525944	DN390B LED7/840 PSU D100 AL WP GCG2HE	Aluminum	IP20/54
911401526044	DN390B LED7/830 PSU D100 AL WP GCG2HE	Aluminum	IP20/54
911401533344	DN391B LED14/865 P11PSU D100 AL GMG2HE	Aluminum	IP20
911401533444	DN391B LED14/840 P11PSU D100 AL GMG2HE	Aluminum	IP20
911401533544	DN391B LED14/830 P11PSU D100 AL GMG2HE	Aluminum	IP20
911401533944	DN391B LED14/865 PSU D100 AL GCG2HE	Aluminum	IP20
911401534044	DN391B LED14/840 PSU D100 AL GCG2HE	Aluminum	IP20
911401534144	DN391B LED14/830 PSU D100 AL GCG2HE	Aluminum	IP20
911401534544	DN391B LED12/865 P10PSU D100 AL GMG2HE	Aluminum	IP20
911401534644	DN391B LED12/840 P10PSU D100 AL GMG2HE	Aluminum	IP20
911401534744	DN391B LED12/830 P10PSU D100 AL GMG2HE	Aluminum	IP20
911401535144	DN391B LED12/865 PSU D100 AL GCG2HE	Aluminum	IP20
911401535244	DN391B LED12/840 PSU D100 AL GCG2HE	Aluminum	IP20
911401535444	DN391B LED12/830 PSU D100 AL GCG2HE	Aluminum	IP20
911401535844	DN390B LED7/865 P6PSU D100 AL GMG2HE	Aluminum	IP20
911401535944	DN390B LED7/840 P6PSU D100 AL GMG2HE	Aluminum	IP20
911401536044	DN390B LED7/830 P6PSU D100 AL GMG2HE	Aluminum	IP20
911401536444	DN390B LED7/865 PSU D100 AL GCG2HE	Aluminum	IP20
911401536544	DN390B LED7/840 PSU D100 AL GCG2HE	Aluminum	IP20
911401536644	DN390B LED7/830 PSU D100 AL GCG2HE	Aluminum	IP20
911401537444	DN391X LED14/865 P12WIA D100 AL G2HE	Aluminum	IP20
911401538044	DN391X LED14/830 P12WIA D100 AL G2HE	Aluminum	IP20
911401538644	DN391X LED14/840 P12WIA D100 AL G2HE	Aluminum	IP20
911401570144	DN391B LED14/865 P12PSD D100 ALWP GMG2HE	Aluminum and RAL (to be defined)	IP20/54
911401570244	DN391B LED14/840 P12PSD D100 ALWP GMG2HE	Aluminum and RAL (to be defined)	IP20/54
911401570344	DN391B LED14/830 P12PSD D100 ALWP GMG2HE	Aluminum and RAL (to be defined)	IP20/54
911401570444	DN391B LED14/865 PSD D100 AL WP GCG2HE	Aluminum and RAL (to be defined)	IP20/54
911401570544	DN391B LED14/840 PSD D100 AL WP GCG2HE	Aluminum and RAL (to be defined)	IP20/54
911401570644	DN391B LED14/830 PSD D100 AL WP GCG2HE	Aluminum and RAL (to be defined)	IP20/54
911401570744	DN391B LED12/865 P10PSD D100 ALWP GMG2HE	Aluminum and RAL (to be defined)	IP20/54
911401570844	DN391B LED12/840 P10PSD D100 ALWP GMG2HE	Aluminum and RAL (to be defined)	IP20/54
911401570944	DN391B LED12/830 P10PSD D100 ALWP GMG2HE	Aluminum and RAL (to be defined)	IP20/54
911401571044	DN391B LED12/865 PSD D100 AL WP GCG2HE	Aluminum and RAL (to be defined)	IP20/54

Order Code	Full Product Name	Housing Color	Ingress protection code
911401571144	DN391B LED12/840 PSD D100 AL WP GCG2HE	Aluminum and RAL (to be defined)	IP20/54
911401571244	DN391B LED12/830 PSD D100 AL WP GCG2HE	Aluminum and RAL (to be defined)	IP20/54
911401577944	DN391B LED14/865 P12PSD D100 AL GMG2HE	Aluminum and RAL (to be defined)	IP20
911401578044	DN391B LED14/840 P12PSD D100 AL GMG2HE	Aluminum and RAL (to be defined)	IP20
911401578144	DN391B LED14/830 P12PSD D100 AL GMG2HE	Aluminum and RAL (to be defined)	IP20
911401578544	DN391B LED14/865 PSD D100 AL GCG2HE	Aluminum and RAL (to be defined)	IP20
911401578644	DN391B LED14/840 PSD D100 AL GCG2HE	Aluminum and RAL (to be defined)	IP20
911401578744	DN391B LED14/830 PSD D100 AL GCG2HE	Aluminum and RAL (to be defined)	IP20
911401579144	DN391B LED12/865 P10PSD D100 AL GMG2HE	Aluminum and RAL (to be defined)	IP20
911401579244	DN391B LED12/840 P10PSD D100 AL GMG2HE	Aluminum and RAL (to be defined)	IP20
911401579344	DN391B LED12/830 P10PSD D100 AL GMG2HE	Aluminum and RAL (to be defined)	IP20
911401579744	DN391B LED12/865 PSD D100 AL GCG2HE	Aluminum and RAL (to be defined)	IP20
911401579944	DN391B LED12/830 PSD D100 AL GCG2HE	Aluminum and RAL (to be defined)	IP20
911401503845	DN394X LED34/9TNW P27PSD D200 WH WP G2	Black	IP54
911401504145	DN394X LED34/9TNW P27PSD D200 WH WPCAUG2	Black	IP54
911401519944	DN393B LED26/840 P20PSU D200WHWP CAUG2HE	Aluminum	IP20/54
911401520344	DN393B LED26/840 P20PSU D200 WH CAUG2HE	Aluminum	IP20
911401526444	DN394B LED40/865 P29PSU D200 WH GMG2HE	Aluminum	IP20
911401526544	DN394B LED40/840 P29PSU D200 WH GMG2HE	Aluminum	IP20
911401526644	DN394B LED40/830 P29PSU D200 WH GMG2HE	Aluminum	IP20
911401527044	DN394B LED40/865 PSU D200 WH GCG2HE	Aluminum	IP20
911401527144	DN394B LED40/840 PSU D200 WH GCG2HE	Aluminum	IP20
911401527244	DN394B LED40/830 PSU D200 WH GCG2HE	Aluminum	IP20
911401527644	DN393B LED26/865 P19PSU D200 WH GMG2HE	Aluminum	IP20
911401527744	DN393B LED26/840 P19PSU D200 WH GMG2HE	Aluminum	IP20
911401527844	DN393B LED26/830 P19PSU D200 WH GMG2HE	Aluminum	IP20
911401528244	DN393B LED26/865 PSU D200 WH GCG2HE	Aluminum	IP20
911401528344	DN393B LED26/840 PSU D200 WH GCG2HE	Aluminum	IP20
911401528444	DN393B LED26/830 PSU D200 WH GCG2HE	Aluminum	IP20
911401530044	DN392B LED20/865 P14PSU D200 WH GMG2HE	Aluminum	IP20
911401530144	DN392B LED20/840 P14PSU D200 WH GMG2HE	Aluminum	IP20
911401530244	DN392B LED20/830 P14PSU D200 WH GMG2HE	Aluminum	IP20
911401530644	DN392B LED20/865 PSU D200 WH GCG2HE	Aluminum	IP20
911401530744	DN392B LED20/840 PSU D200 WH GCG2HE	Aluminum	IP20
911401530844	DN392B LED20/830 PSU D200 WH GCG2HE	Aluminum	IP20
911401537144	DN393X LED26/865 P20WIA D200 WH G2HE	Aluminum	IP20
911401537744	DN393X LED26/830 P20WIA D200 WH G2HE	Aluminum	IP20
911401538344	DN393X LED26/840 P20WIA D200 WH G2HE	Aluminum	IP20
911401571644	DN394B LED40/865 P29PSD D200 WH GMG2HE	Aluminum and RAL (to be defined)	IP20
911401571744	DN394B LED40/840 P29PSD D200 WH GMG2HE	Aluminum and RAL (to be defined)	IP20
911401571844	DN394B LED40/830 P29PSD D200 WH GMG2HE	Aluminum and RAL (to be defined)	IP20
911401572244	DN394B LED40/865 PSD D200 WH GCG2HE	Aluminum and RAL (to be defined)	IP20

Order Code	Full Product Name	Housing Color	Ingress protection code
911401572344	DN394B LED40/840 PSD D200 WH GCG2HE	Aluminum and RAL (to be defined)	IP20
911401572444	DN394B LED40/830 PSD D200 WH GCG2HE	Aluminum and RAL (to be defined)	IP20
911401572844	DN393B LED26/865 P20PSD D200 WH GMG2HE	Aluminum and RAL (to be defined)	IP20
911401572944	DN393B LED26/840 P20PSD D200 WH GMG2HE	Aluminum and RAL (to be defined)	IP20
911401573044	DN393B LED26/830 P20PSD D200 WH GMG2HE	Aluminum and RAL (to be defined)	IP20
911401573444	DN393B LED26/865 PSD D200 WH GCG2HE	Aluminum and RAL (to be defined)	IP20
911401573544	DN393B LED26/840 PSD D200 WH GCG2HE	Aluminum and RAL (to be defined)	IP20
911401573644	DN393B LED26/830 PSD D200 WH GCG2HE	Aluminum and RAL (to be defined)	IP20
911401575244	DN392B LED18/865 P14PSD D200 WH GMG2HE	Aluminum and RAL (to be defined)	IP20
911401575344	DN392B LED18/840 P14PSD D200 WH GMG2HE	Aluminum and RAL (to be defined)	IP20
911401575444	DN392B LED18/830 P14PSD D200 WH GMG2HE	Aluminum and RAL (to be defined)	IP20
911401575844	DN392B LED18/865 PSD D200 WH GCG2HE	Aluminum and RAL (to be defined)	IP20
911401575944	DN392B LED18/840 PSD D200 WH GCG2HE	Aluminum and RAL (to be defined)	IP20
911401576044	DN392B LED18/830 PSD D200 WH GCG2HE	Aluminum and RAL (to be defined)	IP20
911401586932	DN393B LED22/840 P20PSU D200 WH CAUG2	Black and white	IP20
911401588632	DN393B LED22/840 P20PSU D200 WH WP CAUG2	Black and white	IP20/54
911401539144	DN394X LED40/840 L1W D200 WH GCG2HE	Aluminum and RAL (to be defined)	IP20
911401539344	DN393X LED26/840 L1W D200 WH GCG2HE	Aluminum and RAL (to be defined)	IP20
911401540144	DN394X LED40/840 P29L1W D200 WH GMG2HE	Aluminum and RAL (to be defined)	IP20
911401540344	DN393X LED26/840 P20L1W D200 WH GMG2HE	Aluminum and RAL (to be defined)	IP20
911401503545	DN394X LED33/9TNW P27PSD D200 AL WP G2	Black	IP54
911401520744	DN394B LED38/865 P29PSU D200 ALWP GMG2HE	Aluminum	IP20/54
911401520844	DN394B LED38/840 P29PSU D200 ALWP GMG2HE	Aluminum	IP20/54
911401520944	DN394B LED38/830 P29PSU D200 ALWP GMG2HE	Aluminum	IP20/54
911401521044	DN394B LED38/865 PSU D200 AL WP GCG2HE	Aluminum	IP20/54
911401521144	DN394B LED38/840 PSU D200 AL WP GCG2HE	Aluminum	IP20/54
911401521244	DN394B LED38/830 PSU D200 AL WP GCG2HE	Aluminum	IP20/54
911401521344	DN393B LED25/865 P19PSU D200 ALWP GMG2HE	Aluminum	IP20/54
911401521444	DN393B LED25/840 P19PSU D200 ALWP GMG2HE	Aluminum	IP20/54
911401521544	DN393B LED25/830 P19PSU D200 ALWP GMG2HE	Aluminum	IP20/54
911401521644	DN393B LED25/865 PSU D200 AL WP GCG2HE	Aluminum	IP20/54
911401521744	DN393B LED25/840 PSU D200 AL WP GCG2HE	Aluminum	IP20/54
911401521844	DN393B LED25/830 PSU D200 AL WP GCG2HE	Aluminum	IP20/54
911401522544	DN392B LED18/865 P14PSU D200 ALWP GMG2HE	Aluminum	IP20/54
911401522644	DN392B LED18/840 P14PSU D200 ALWP GMG2HE	Aluminum	IP20/54
911401522744	DN392B LED18/830 P14PSU D200 ALWP GMG2HE	Aluminum	IP20/54
911401522844	DN392B LED18/865 PSU D200 AL WP GCG2HE	Aluminum	IP20/54
911401522944	DN392B LED18/840 PSU D200 AL WP GCG2HE	Aluminum	IP20/54
911401523044	DN392B LED18/830 PSU D200 AL WP GCG2HE	Aluminum	IP20/54
911401526144	DN394B LED38/865 P29PSU D200 AL GMG2HE	Aluminum	IP20
911401526244	DN394B LED38/840 P29PSU D200 AL GMG2HE	Aluminum	IP20
911401526344	DN394B LED38/830 P29PSU D200 AL GMG2HE	Aluminum	IP20

Order Code	Full Product Name	Housing Color	Ingress protection code
911401526744	DN394B LED38/865 PSU D200 AL GCG2HE	Aluminum	IP20
911401526844	DN394B LED38/840 PSU D200 AL GCG2HE	Aluminum	IP20
911401526944	DN394B LED38/830 PSU D200 AL GCG2HE	Aluminum	IP20
911401527344	DN393B LED25/865 P19PSU D200 AL GMG2HE	Aluminum	IP20
911401527444	DN393B LED25/840 P19PSU D200 AL GMG2HE	Aluminum	IP20
911401527544	DN393B LED25/830 P19PSU D200 AL GMG2HE	Aluminum	IP20
911401527944	DN393B LED25/865 PSU D200 AL GCG2HE	Aluminum	IP20
911401528044	DN393B LED25/840 PSU D200 AL GCG2HE	Aluminum	IP20
911401528144	DN393B LED25/830 PSU D200 AL GCG2HE	Aluminum	IP20
911401529744	DN392B LED18/865 P14PSU D200 AL GMG2HE	Aluminum	IP20
911401529844	DN392B LED18/840 P14PSU D200 AL GMG2HE	Aluminum	IP20
911401529944	DN392B LED18/830 P14PSU D200 AL GMG2HE	Aluminum	IP20
911401530344	DN392B LED18/865 PSU D200 AL GCG2HE	Aluminum	IP20
911401530444	DN392B LED18/840 PSU D200 AL GCG2HE	Aluminum	IP20
911401530544	DN392B LED18/830 PSU D200 AL GCG2HE	Aluminum	IP20
911401537044	DN393X LED25/865 P20WIA D200 AL G2HE	Aluminum	IP20
911401537644	DN393X LED25/830 P20WIA D200 AL G2HE	Aluminum	IP20
911401538244	DN393X LED25/840 P20WIA D200 AL G2HE	Aluminum	IP20
911401566844	DN394B LED38/865 P29PSD D200 ALWP GMG2HE	Aluminum and RAL (to be defined)	IP20/54
911401566944	DN394B LED38/840 P29PSD D200 ALWP GMG2HE	Aluminum and RAL (to be defined)	IP20/54
911401567044	DN394B LED38/830 P29PSD D200 ALWP GMG2HE	Aluminum and RAL (to be defined)	IP20/54
911401567144	DN394B LED38/865 PSD D200 AL WP GCG2HE	Aluminum and RAL (to be defined)	IP20/54
911401567244	DN394B LED38/840 PSD D200 AL WP GCG2HE	Aluminum and RAL (to be defined)	IP20/54
911401567344	DN394B LED38/830 PSD D200 AL WP GCG2HE	Aluminum and RAL (to be defined)	IP20/54
911401567444	DN393B LED25/865 P20PSD D200 ALWP GMG2HE	Aluminum and RAL (to be defined)	IP20/54
911401567544	DN393B LED25/840 P20PSD D200 ALWP GMG2HE	Aluminum and RAL (to be defined)	IP20/54
911401567644	DN393B LED25/830 P20PSD D200 ALWP GMG2HE	Aluminum and RAL (to be defined)	IP20/54
911401567744	DN393B LED25/865 PSD D200 AL WP GCG2HE	Aluminum and RAL (to be defined)	IP20/54
911401567844	DN393B LED25/840 PSD D200 AL WP GCG2HE	Aluminum and RAL (to be defined)	IP20/54
911401567944	DN393B LED25/830 PSD D200 AL WP GCG2HE	Aluminum and RAL (to be defined)	IP20/54
911401568644	DN392B LED18/865 P14PSD D200 ALWP GMG2HE	Aluminum and RAL (to be defined)	IP20/54
911401568744	DN392B LED18/840 P14PSD D200 ALWP GMG2HE	Aluminum and RAL (to be defined)	IP20/54
911401568844	DN392B LED18/830 P14PSD D200 ALWP GMG2HE	Aluminum and RAL (to be defined)	IP20/54
911401568944	DN392B LED18/865 PSD D200 AL WP GCG2HE	Aluminum and RAL (to be defined)	IP20/54
911401569044	DN392B LED18/840 PSD D200 AL WP GCG2HE	Aluminum and RAL (to be defined)	IP20/54
911401569144	DN392B LED18/830 PSD D200 AL WP GCG2HE	Aluminum and RAL (to be defined)	IP20/54
911401571344	DN394B LED38/865 P29PSD D200 AL GMG2HE	Aluminum and RAL (to be defined)	IP20
911401571444	DN394B LED38/840 P29PSD D200 AL GMG2HE	Aluminum and RAL (to be defined)	IP20
911401571544	DN394B LED38/830 P29PSD D200 AL GMG2HE	Aluminum and RAL (to be defined)	IP20
911401571944	DN394B LED38/865 PSD D200 AL GCG2HE	Aluminum and RAL (to be defined)	IP20
911401572044	DN394B LED38/840 PSD D200 AL GCG2HE	Aluminum and RAL (to be defined)	IP20
911401572144	DN394B LED38/830 PSD D200 AL GCG2HE	Aluminum and RAL (to be defined)	IP20

Order Code	Full Product Name	Housing Color	Ingress protection code
911401572544	DN393B LED25/865 P20PSD D200 AL GMG2HE	Aluminum and RAL (to be defined)	IP20
911401572644	DN393B LED25/840 P20PSD D200 AL GMG2HE	Aluminum and RAL (to be defined)	IP20
911401572744	DN393B LED25/830 P20PSD D200 AL GMG2HE	Aluminum and RAL (to be defined)	IP20
911401573144	DN393B LED25/865 PSD D200 AL GCG2HE	Aluminum and RAL (to be defined)	IP20
911401573244	DN393B LED25/840 PSD D200 AL GCG2HE	Aluminum and RAL (to be defined)	IP20
911401573344	DN393B LED25/830 PSD D200 AL GCG2HE	Aluminum and RAL (to be defined)	IP20
911401574944	DN392B LED18/865 P14PSD D200 AL GMG2HE	Aluminum and RAL (to be defined)	IP20
911401575044	DN392B LED18/840 P14PSD D200 AL GMG2HE	Aluminum and RAL (to be defined)	IP20
911401575144	DN392B LED18/830 P14PSD D200 AL GMG2HE	Aluminum and RAL (to be defined)	IP20
911401575544	DN392B LED18/865 PSD D200 AL GCG2HE	Aluminum and RAL (to be defined)	IP20
911401575644	DN392B LED18/840 PSD D200 AL GCG2HE	Aluminum and RAL (to be defined)	IP20
911401575744	DN392B LED18/830 PSD D200 AL GCG2HE	Aluminum and RAL (to be defined)	IP20
911401577042	DN393X LED22/840 P20L1W D200 WH CAUG2	Black and white	IP20
911401577542	DN392X LED17/840 P15L1W D150 WH CAUG2	Black and white	IP20
911401538844	DN392X LED20/840 L1W D150 WH GCG2HE	Aluminum and RAL (to be defined)	IP20
911401539544	DN392X LED22/840 L1W D150 WH GCG2HE	Aluminum and RAL (to be defined)	IP20
911401539944	DN392X LED20/840 P15L1W D150 WH GMG2HE	Aluminum and RAL (to be defined)	IP20
911401540544	DN392X LED22/840 P17L1W D150 WH GMG2HE	Aluminum and RAL (to be defined)	IP20
911401503945	DN392X LED17/9TNW P15PSD D150 WH WP G2	Black	IP54
911401504245	DN392X LED17/9TNW P15PSD D150 WH WPCAUG2	Black	IP54
911401520044	DN392B LED20/840 P15PSU D150WHWP CAUG2HE	Aluminum	IP20/54
911401520144	DN391B LED13/840 P11PSU D150WHWP CAUG2HE	Aluminum	IP20/54
911401520444	DN392B LED20/840 P15PSU D150 WH CAUG2HE	Aluminum	IP20
911401520544	DN391B LED13/840 P11PSU D150 WH CAUG2HE	Aluminum	IP20
911401528844	DN392B LED22/865 P16PSU D150 WH GMG2HE	Aluminum	IP20
911401528944	DN392B LED22/840 P16PSU D150 WH GMG2HE	Aluminum	IP20
911401529044	DN392B LED22/830 P16PSU D150 WH GMG2HE	Aluminum	IP20
911401529444	DN392B LED22/865 PSU D150 WH GCG2HE	Aluminum	IP20
911401529544	DN392B LED22/840 PSU D150 WH GCG2HE	Aluminum	IP20
911401529644	DN392B LED22/830 PSU D150 WH GCG2HE	Aluminum	IP20
911401531244	DN392B LED20/865 P14PSU D150 WH GMG2HE	Aluminum	IP20
911401531344	DN392B LED20/840 P14PSU D150 WH GMG2HE	Aluminum	IP20
911401531444	DN392B LED20/830 P14PSU D150 WH GMG2HE	Aluminum	IP20
911401531844	DN392B LED20/865 PSU D150 WH GCG2HE	Aluminum	IP20
911401531944	DN392B LED20/840 PSU D150 WH GCG2HE	Aluminum	IP20
911401532044	DN392B LED20/830 PSU D150 WH GCG2HE	Aluminum	IP20
911401532444	DN391B LED13/865 P10PSU D150 WH GMG2HE	Aluminum	IP20
911401532544	DN391B LED13/840 P10PSU D150 WH GMG2HE	Aluminum	IP20
911401532644	DN391B LED13/830 P10PSU D150 WH GMG2HE	Aluminum	IP20
911401533044	DN391B LED13/865 PSU D150 WH GCG2HE	Aluminum	IP20
911401533144	DN391B LED13/840 PSU D150 WH GCG2HE	Aluminum	IP20
911401533244	DN391B LED13/830 PSU D150 WH GCG2HE	Aluminum	IP20

Order Code	Full Product Name	Housing Color	Ingress protection code
911401537344	DN392X LED20/865 P15WIA D150 WH G2HE	Aluminum	IP20
911401537944	DN392X LED20/830 P15WIA D150 WH G2HE	Aluminum	IP20
911401538544	DN392X LED20/840 P15WIA D150 WH G2HE	Aluminum	IP20
911401566544	DN392B LED19/865 P14PSD D150 WH GMG2HE	Aluminum and RAL (to be defined)	IP20
911401566644	DN392B LED19/840 P14PSD D150 WH GMG2HE	Aluminum and RAL (to be defined)	IP20
911401566744	DN392B LED19/830 P14PSD D150 WH GMG2HE	Aluminum and RAL (to be defined)	IP20
911401574044	DN392B LED23/865 P17PSD D150 WH GMG2HE	Aluminum and RAL (to be defined)	IP20
911401574144	DN392B LED23/840 P17PSD D150 WH GMG2HE	Aluminum and RAL (to be defined)	IP20
911401574244	DN392B LED23/830 P17PSD D150 WH GMG2HE	Aluminum and RAL (to be defined)	IP20
911401574644	DN392B LED23/865 PSD D150 WH GCG2HE	Aluminum and RAL (to be defined)	IP20
911401574744	DN392B LED23/840 PSD D150 WH GCG2HE	Aluminum and RAL (to be defined)	IP20
911401574844	DN392B LED23/830 PSD D150 WH GCG2HE	Aluminum and RAL (to be defined)	IP20
911401576444	DN392B LED19/865 PSD D150 WH GCG2HE	Aluminum and RAL (to be defined)	IP20
911401576544	DN392B LED19/840 PSD D150 WH GCG2HE	Aluminum and RAL (to be defined)	IP20
911401576644	DN392B LED19/830 PSD D150 WH GCG2HE	Aluminum and RAL (to be defined)	IP20
911401577044	DN391B LED13/865 P11PSD D150 WH GMG2HE	Aluminum and RAL (to be defined)	IP20
911401577144	DN391B LED13/840 P11PSD D150 WH GMG2HE	Aluminum and RAL (to be defined)	IP20
911401577244	DN391B LED13/830 P11PSD D150 WH GMG2HE	Aluminum and RAL (to be defined)	IP20
911401577644	DN391B LED13/865 PSD D150 WH GCG2HE	Aluminum and RAL (to be defined)	IP20
911401577744	DN391B LED13/840 PSD D150 WH GCG2HE	Aluminum and RAL (to be defined)	IP20
911401577844	DN391B LED13/830 PSD D150 WH GCG2HE	Aluminum and RAL (to be defined)	IP20
911401585532	DN391B LED11/840 P11PSU D150 WH CAUG2	Black and white	IP20
911401587832	DN391B LED11/840 P11PSU D150 WH WP CAUG2	Black and white	IP20/54
911401587932	DN392B LED17/840 P15PSU D150 WH WP CAUG2	Black and white	IP20/54
911401538944	DN392X LED18/840 L1W D150 AL GCG2HE	Aluminum and RAL (to be defined)	IP20
911401539444	DN392X LED20/840 L1W D150 AL GCG2HE	Aluminum and RAL (to be defined)	IP20
911401539844	DN392X LED18/840 P15L1W D150 AL GMG2HE	Aluminum and RAL (to be defined)	IP20
911401540444	DN392X LED20/840 P17L1W D150 AL GMG2HE	Aluminum and RAL (to be defined)	IP20

Initial Performance (IEC Compliant)

Order Code	Full Product Name	Luminous flux tolerance	Initial chromaticity
911401539044	DN394X LED38/840 L1W D200 AL GCG2HE	-10% / +10%	-
911401539244	DN393X LED25/840 L1W D200 AL GCG2HE	-10% / +10%	-
911401540044	DN394X LED38/840 P29L1W D200 AL GMG2HE	-10% / +10%	-
911401540244	DN393X LED25/840 P20L1W D200 AL GMG2HE	-10% / +10%	-
911401504045	DN391X LED8/9TNW P7PSD D100 WH WP G2	+/-10%	SDCM5
911401504345	DN391X LED8/9TNW P7PSD D100 WH WPCAUG2	+/-10%	SDCM5
911401520244	DN390B LED7/840 P6PSU D100WHWP CAUG2HE	+/-10%	5
911401520644	DN390B LED7/840 P6PSU D100 WH CAUG2HE	+/-10%	5
911401533644	DN391B LED15/865 P11PSU D100 WH GMG2HE	+/-10%	5
911401533744	DN391B LED15/840 P11PSU D100 WH GMG2HE	+/-10%	5
911401533844	DN391B LED15/830 P11PSU D100 WH GMG2HE	+/-10%	5

Order Code	Full Product Name	Luminous flux tolerance	Initial chromaticity
911401534244	DN391B LED15/865 PSU D100 WH GCG2HE	+/-10%	5
911401534344	DN391B LED15/840 PSU D100 WH GCG2HE	+/-10%	5
911401534444	DN391B LED15/830 PSU D100 WH GCG2HE	+/-10%	5
911401534844	DN391B LED12/865 P10PSU D100 WH GMG2HE	+/-10%	5
911401534944	DN391B LED12/840 P10PSU D100 WH GMG2HE	+/-10%	5
911401535044	DN391B LED12/830 P10PSU D100 WH GMG2HE	+/-10%	5
911401535544	DN391B LED12/865 PSU D100 WH GCG2HE	+/-10%	5
911401535644	DN391B LED12/840 PSU D100 WH GCG2HE	+/-10%	5
911401535744	DN391B LED12/830 PSU D100 WH GCG2HE	+/-10%	5
911401536144	DN390B LED7/865 P6PSU D100 WH GMG2HE	+/-10%	5
911401536244	DN390B LED7/840 P6PSU D100 WH GMG2HE	+/-10%	5
911401536344	DN390B LED7/830 P6PSU D100 WH GMG2HE	+/-10%	5
911401536744	DN390B LED7/865 PSU D100 WH GCG2HE	+/-10%	5
911401536844	DN390B LED7/840 PSU D100 WH GCG2HE	+/-10%	5
911401536944	DN390B LED7/830 PSU D100 WH GCG2HE	+/-10%	5
911401537544	DN391X LED15/865 P12WIA D100 WH G2HE	+/-10%	5
911401538144	DN391X LED15/830 P12WIA D100 WH G2HE	+/-10%	5
911401538744	DN391X LED15/840 P12WIA D100WH G2HE	+/-10%	5
911401578244	DN391B LED15/865 P12PSD D100 WH GMG2HE	-10% / +10%	5
911401578344	DN391B LED15/840 P12PSD D100 WH GMG2HE	-10% / +10%	5
911401578444	DN391B LED15/830 P12PSD D100 WH GMG2HE	-10% / +10%	5
911401578844	DN391B LED15/865 PSD D100 WH GCG2HE	-10% / +10%	5
911401578944	DN391B LED15/840 PSD D100 WH GCG2HE	-10% / +10%	5
911401579044	DN391B LED15/830 PSD D100 WH GCG2HE	-10% / +10%	5
911401579444	DN391B LED12/865 P10PSD D100 WH GMG2HE	-10% / +10%	5
911401579544	DN391B LED12/840 P10PSD D100 WH GMG2HE	-10% / +10%	5
911401579644	DN391B LED12/830 P10PSD D100 WH GMG2HE	-10% / +10%	5
911401580044	DN391B LED12/865 PSD D100 WH GCG2HE	-10% / +10%	5
911401580144	DN391B LED12/840 PSD D100 WH GCG2HE	-10% / +10%	5
911401580244	DN391B LED12/830 PSD D100 WH GCG2HE	-10% / +10%	5
911401539644	DN391X LED14/840 L1W D100 AL GCG2HE	-10% / +10%	-
911401540644	DN391X LED14/840 P11L1W D100 AL GMG2HE	-10% / +10%	-
911401503645	DN392X LED16/9TNW P15PSD D150 AL WP G2	+/-10%	SDCM5
911401521944	DN392B LED20/865 P16PSU D150 ALWP GMG2HE	+/-10%	5
911401522044	DN392B LED20/840 P16PSU D150 ALWP GMG2HE	+/-10%	5
911401522144	DN392B LED20/830 P16PSU D150 ALWP GMG2HE	+/-10%	5
911401522244	DN392B LED20/865 PSU D150 AL WP GCG2HE	+/-10%	5
911401522344	DN392B LED20/840 PSU D150 AL WP GCG2HE	+/-10%	5
911401522444	DN392B LED20/830 PSU D150 AL WP GCG2HE	+/-10%	5
911401523144	DN392B LED18/865 P14PSU D150 ALWP GMG2HE	+/-10%	5
911401523244	DN392B LED18/840 P14PSU D150 ALWP GMG2HE	+/-10%	5
911401523344	DN392B LED18/830 P14PSU D150 ALWP GMG2HE	+/-10%	5

Order Code	Full Product Name	Luminous flux tolerance	Initial chromaticity
911401523444	DN392B LED18/865 PSU D150 AL WP GCG2HE	+/-10%	5
911401523544	DN392B LED18/840 PSU D150 AL WP GCG2HE	+/-10%	5
911401523644	DN392B LED18/830 PSU D150 AL WP GCG2HE	+/-10%	5
911401523744	DN391B LED12/865 P10PSU D150 ALWP GMG2HE	+/-10%	5
911401523844	DN391B LED12/840 P10PSU D150 ALWP GMG2HE	+/-10%	5
911401523944	DN391B LED12/830 P10PSU D150 ALWP GMG2HE	+/-10%	5
911401524044	DN391B LED12/865 PSU D150 AL WP GCG2HE	+/-10%	5
911401524144	DN391B LED12/840 PSU D150 AL WP GCG2HE	+/-10%	5
911401524244	DN391B LED12/830 PSU D150 AL WP GCG2HE	+/-10%	5
911401528544	DN392B LED20/865 P16PSU D150 AL GMG2HE	+/-10%	5
911401528644	DN392B LED20/840 P16PSU D150 AL GMG2HE	+/-10%	5
911401528744	DN392B LED20/830 P16PSU D150 AL GMG2HE	+/-10%	5
911401529144	DN392B LED20/865 PSU D150 AL GCG2HE	+/-10%	5
911401529244	DN392B LED20/840 PSU D150 AL GCG2HE	+/-10%	5
911401529344	DN392B LED20/830 PSU D150 AL GCG2HE	+/-10%	5
911401530944	DN392B LED18/865 P14PSU D150 AL GMG2HE	+/-10%	5
911401531044	DN392B LED18/840 P14PSU D150 AL GMG2HE	+/-10%	5
911401531144	DN392B LED18/830 P14PSU D150 AL GMG2HE	+/-10%	5
911401531544	DN392B LED18/865 PSU D150 AL GCG2HE	+/-10%	5
911401531644	DN392B LED18/840 PSU D150 AL GCG2HE	+/-10%	5
911401531744	DN392B LED18/830 PSU D150 AL GCG2HE	+/-10%	5
911401532144	DN391B LED12/865 P10PSU D150 AL GMG2HE	+/-10%	5
911401532244	DN391B LED12/840 P10PSU D150 AL GMG2HE	+/-10%	5
911401532344	DN391B LED12/830 P10PSU D150 AL GMG2HE	+/-10%	5
911401532744	DN391B LED12/865 PSU D150 AL GCG2HE	+/-10%	5
911401532844	DN391B LED12/840 PSU D150 AL GCG2HE	+/-10%	5
911401532944	DN391B LED13/830 PSU D150 AL GCG2HE	+/-10%	5
911401537244	DN392X LED18/865 P15WIA D150 AL G2HE	+/-10%	5
911401537844	DN392X LED18/830 P15WIA D150 AL G2HE	+/-10%	5
911401538444	DN392X LED18/840 P15WIA D150 AL G2HE	+/-10%	5
911401565944	DN392B LED18/865 P14PSD D150 ALWP GMG2HE	-10% / +10%	5
911401566044	DN392B LED18/840 P14PSD D150 ALWP GMG2HE	-10% / +10%	5
911401566144	DN392B LED18/830 P14PSD D150 ALWP GMG2HE	-10% / +10%	5
911401566244	DN392B LED18/865 P14PSD D150 AL GMG2HE	-10% / +10%	5
911401566344	DN392B LED18/840 P14PSD D150 AL GMG2HE	-10% / +10%	5
911401566444	DN392B LED18/830 P14PSD D150 AL GMG2HE	-10% / +10%	5
911401568044	DN392B LED22/865 P17PSD D150 ALWP GMG2HE	-10% / +10%	5
911401568144	DN392B LED22/840 P17PSD D150 ALWP GMG2HE	-10% / +10%	5
911401568244	DN392B LED22/830 P17PSD D150 ALWP GMG2HE	-10% / +10%	5
911401568344	DN392B LED22/865 PSD D150 AL WP GCG2HE	-10% / +10%	5
911401568444	DN392B LED22/840 PSD D150 AL WP GCG2HE	-10% / +10%	5
911401568544	DN392B LED22/830 PSD D150 AL WP GCG2HE	-10% / +10%	5

Order Code	Full Product Name	Luminous flux tolerance	Initial chromaticity
911401569244	DN392B LED18/865 PSD D150 AL WP GCG2HE	-10% / +10%	5
911401569344	DN392B LED18/840 PSD D150 AL WP GCG2HE	-10% / +10%	5
911401569444	DN392B LED18/830 PSD D150 AL WP GCG2HE	-10% / +10%	5
911401569544	DN391B LED12/865 P11PSD D150 ALWP GMG2HE	-10% / +10%	5
911401569644	DN391B LED12/840 P11PSD D150 ALWP GMG2HE	-10% / +10%	5
911401569744	DN391B LED12/830 P11PSD D150 ALWP GMG2HE	-10% / +10%	5
911401569844	DN391B LED12/865 PSD D150 AL WP GCG2HE	-10% / +10%	5
911401569944	DN391B LED12/840 PSD D150 AL WP GCG2HE	-10% / +10%	5
911401570044	DN391B LED12/830 PSD D150 AL WP GCG2HE	-10% / +10%	5
911401573744	DN392B LED22/865 P17PSD D150 AL GMG2HE	-10% / +10%	5
911401573844	DN392B LED22/840 P17PSD D150 AL GMG2HE	-10% / +10%	5
911401573944	DN392B LED22/830 P17PSD D150 AL GMG2HE	-10% / +10%	5
911401574344	DN392B LED22/865 PSD D150 AL GCG2HE	-10% / +10%	5
911401574444	DN392B LED22/840 PSD D150 AL GCG2HE	-10% / +10%	5
911401574544	DN392B LED22/830 PSD D150 AL GCG2HE	-10% / +10%	5
911401576144	DN392B LED18/865 PSD D150 AL GCG2HE	-10% / +10%	5
911401576244	DN392B LED18/840 PSD D150 AL GCG2HE	-10% / +10%	5
911401576344	DN392B LED18/830 PSD D150 AL GCG2HE	-10% / +10%	5
911401576744	DN391B LED12/865 P11PSD D150 AL GMG2HE	-10% / +10%	5
911401576844	DN391B LED12/840 P11PSD D150 AL GMG2HE	-10% / +10%	5
911401576944	DN391B LED12/830 P11PSD D150 AL GMG2HE	-10% / +10%	5
911401577344	DN391B LED12/865 PSD D150 AL GCG2HE	-10% / +10%	5
911401577444	DN391B LED12/840 PSD D150 AL GCG2HE	-10% / +10%	5
911401577544	DN391B LED12/830 PSD D150 AL GCG2HE	-10% / +10%	5
911401539744	DN391X LED15/840 L1W D100 WH GCG2HE	-10% / +10%	-
911401540744	DN391X LED15/840 P11L1W D100 WH GMG2HE	-10% / +10%	-
911401577142	DN393X LED22/840 P20L1W D200 AL CAUG2	+/-10%	5
911401577442	DN392X LED17/840 P15L1W D150 AL CAUG2	+/-10%	5
911401503745	DN391X LED7/9TNW P7PSD D100 AL WP G2	+/-10%	SDCM5
911401524344	DN391B LED14/865 P11PSU D100 ALWP GMG2HE	+/-10%	5
911401524444	DN391B LED14/840 P11PSU D100 ALWP GMG2HE	+/-10%	5
911401524544	DN391B LED14/830 P11PSU D100 ALWP GMG2HE	+/-10%	5
911401524644	DN391B LED14/865 PSU D100 AL WP GCG2HE	+/-10%	5
911401524744	DN391B LED14/840 PSU D100 AL WP GCG2HE	+/-10%	5
911401524844	DN391B LED14/830 PSU D100 AL WP GCG2HE	+/-10%	5
911401524944	DN391B LED12/865 P10PSU D100 ALWP GMG2HE	+/-10%	5
911401525044	DN391B LED12/840 P10PSU D100 ALWP GMG2HE	+/-10%	5
911401525144	DN391B LED12/830 P10PSU D100 ALWP GMG2HE	+/-10%	5
911401525244	DN391B LED12/865 PSU D100 AL WP GCG2HE	+/-10%	5
911401525344	DN391B LED12/840 PSU D100 AL WP GCG2HE	+/-10%	5
911401525444	DN391B LED12/830 PSU D100 AL WP GCG2HE	+/-10%	5
911401525544	DN390B LED7/865 P6PSU D100 AL WP GMG2HE	+/-10%	5

Order Code	Full Product Name	Luminous flux tolerance	Initial chromaticity
911401525644	DN390B LED7/840 P6PSU D100 AL WP GMG2HE	+/-10%	5
911401525744	DN390B LED7/830 P6PSU D100 AL WP GMG2HE	+/-10%	5
911401525844	DN390B LED7/865 PSU D100 AL WP GCG2HE	+/-10%	5
911401525944	DN390B LED7/840 PSU D100 AL WP GCG2HE	+/-10%	5
911401526044	DN390B LED7/830 PSU D100 AL WP GCG2HE	+/-10%	5
911401533344	DN391B LED14/865 P11PSU D100 AL GMG2HE	+/-10%	5
911401533444	DN391B LED14/840 P11PSU D100 AL GMG2HE	+/-10%	5
911401533544	DN391B LED14/830 P11PSU D100 AL GMG2HE	+/-10%	5
911401533944	DN391B LED14/865 PSU D100 AL GCG2HE	+/-10%	5
911401534044	DN391B LED14/840 PSU D100 AL GCG2HE	+/-10%	5
911401534144	DN391B LED14/830 PSU D100 AL GCG2HE	+/-10%	5
911401534544	DN391B LED12/865 P10PSU D100 AL GMG2HE	+/-10%	5
911401534644	DN391B LED12/840 P10PSU D100 AL GMG2HE	+/-10%	5
911401534744	DN391B LED12/830 P10PSU D100 AL GMG2HE	+/-10%	5
911401535144	DN391B LED12/865 PSU D100 AL GCG2HE	+/-10%	5
911401535244	DN391B LED12/840 PSU D100 AL GCG2HE	+/-10%	5
911401535444	DN391B LED12/830 PSU D100 AL GCG2HE	+/-10%	5
911401535844	DN390B LED7/865 P6PSU D100 AL GMG2HE	+/-10%	5
911401535944	DN390B LED7/840 P6PSU D100 AL GMG2HE	+/-10%	5
911401536044	DN390B LED7/830 P6PSU D100 AL GMG2HE	+/-10%	5
911401536444	DN390B LED7/865 PSU D100 AL GCG2HE	+/-10%	5
911401536544	DN390B LED7/840 PSU D100 AL GCG2HE	+/-10%	5
911401536644	DN390B LED7/830 PSU D100 AL GCG2HE	+/-10%	5
911401537444	DN391X LED14/865 P12WIA D100 AL G2HE	+/-10%	5
911401538044	DN391X LED14/830 P12WIA D100 AL G2HE	+/-10%	5
911401538644	DN391X LED14/840 P12WIA D100 AL G2HE	+/-10%	5
911401570144	DN391B LED14/865 P12PSD D100 ALWP GMG2HE	-10% / +10%	5
911401570244	DN391B LED14/840 P12PSD D100 ALWP GMG2HE	-10% / +10%	5
911401570344	DN391B LED14/830 P12PSD D100 ALWP GMG2HE	-10% / +10%	5
911401570444	DN391B LED14/865 PSD D100 AL WP GCG2HE	-10% / +10%	5
911401570544	DN391B LED14/840 PSD D100 AL WP GCG2HE	-10% / +10%	5
911401570644	DN391B LED14/830 PSD D100 AL WP GCG2HE	-10% / +10%	5
911401570744	DN391B LED12/865 P10PSD D100 ALWP GMG2HE	-10% / +10%	5
911401570844	DN391B LED12/840 P10PSD D100 ALWP GMG2HE	-10% / +10%	5
911401570944	DN391B LED12/830 P10PSD D100 ALWP GMG2HE	-10% / +10%	5
911401571044	DN391B LED12/865 PSD D100 AL WP GCG2HE	-10% / +10%	5
911401571144	DN391B LED12/840 PSD D100 AL WP GCG2HE	-10% / +10%	5
911401571244	DN391B LED12/830 PSD D100 AL WP GCG2HE	-10% / +10%	5
911401577944	DN391B LED14/865 P12PSD D100 AL GMG2HE	-10% / +10%	5
911401578044	DN391B LED14/840 P12PSD D100 AL GMG2HE	-10% / +10%	5
911401578144	DN391B LED14/830 P12PSD D100 AL GMG2HE	-10% / +10%	5
911401578544	DN391B LED14/865 PSD D100 AL GCG2HE	-10% / +10%	5

Order Code	Full Product Name	Luminous flux tolerance	Initial chromaticity
911401578644	DN391B LED14/840 PSD D100 AL GCG2HE	-10% / +10%	5
911401578744	DN391B LED14/830 PSD D100 AL GCG2HE	-10% / +10%	5
911401579144	DN391B LED12/865 P10PSD D100 AL GMG2HE	-10% / +10%	5
911401579244	DN391B LED12/840 P10PSD D100 AL GMG2HE	-10% / +10%	5
911401579344	DN391B LED12/830 P10PSD D100 AL GMG2HE	-10% / +10%	5
911401579744	DN391B LED12/865 PSD D100 AL GCG2HE	-10% / +10%	5
911401579944	DN391B LED12/830 PSD D100 AL GCG2HE	-10% / +10%	5
911401503845	DN394X LED34/9TNW P27PSD D200 WH WP G2	+/-10%	SDCM5
911401504145	DN394X LED34/9TNW P27PSD D200 WH WPCAUG2	+/-10%	SDCM5
911401519944	DN393B LED26/840 P20PSU D200WHWP CAUG2HE	+/-10%	5
911401520344	DN393B LED26/840 P20PSU D200 WH CAUG2HE	+/-10%	5
911401526444	DN394B LED40/865 P29PSU D200 WH GMG2HE	+/-10%	5
911401526544	DN394B LED40/840 P29PSU D200 WH GMG2HE	+/-10%	5
911401526644	DN394B LED40/830 P29PSU D200 WH GMG2HE	+/-10%	5
911401527044	DN394B LED40/865 PSU D200 WH GCG2HE	+/-10%	5
911401527144	DN394B LED40/840 PSU D200 WH GCG2HE	+/-10%	5
911401527244	DN394B LED40/830 PSU D200 WH GCG2HE	+/-10%	5
911401527644	DN393B LED26/865 P19PSU D200 WH GMG2HE	+/-10%	5
911401527744	DN393B LED26/840 P19PSU D200 WH GMG2HE	+/-10%	5
911401527844	DN393B LED26/830 P19PSU D200 WH GMG2HE	+/-10%	5
911401528244	DN393B LED26/865 PSU D200 WH GCG2HE	+/-10%	5
911401528344	DN393B LED26/840 PSU D200 WH GCG2HE	+/-10%	5
911401528444	DN393B LED26/830 PSU D200 WH GCG2HE	+/-10%	5
911401530044	DN392B LED20/865 P14PSU D200 WH GMG2HE	+/-10%	5
911401530144	DN392B LED20/840 P14PSU D200 WH GMG2HE	+/-10%	5
911401530244	DN392B LED20/830 P14PSU D200 WH GMG2HE	+/-10%	5
911401530644	DN392B LED20/865 PSU D200 WH GCG2HE	+/-10%	5
911401530744	DN392B LED20/840 PSU D200 WH GCG2HE	+/-10%	5
911401530844	DN392B LED20/830 PSU D200 WH GCG2HE	+/-10%	5
911401537144	DN393X LED26/865 P20WIA D200 WH G2HE	+/-10%	5
911401537744	DN393X LED26/830 P20WIA D200 WH G2HE	+/-10%	5
911401538344	DN393X LED26/840 P20WIA D200 WH G2HE	+/-10%	5
911401571644	DN394B LED40/865 P29PSD D200 WH GMG2HE	-10% / +10%	5
911401571744	DN394B LED40/840 P29PSD D200 WH GMG2HE	-10% / +10%	5
911401571844	DN394B LED40/830 P29PSD D200 WH GMG2HE	-10% / +10%	5
911401572244	DN394B LED40/865 PSD D200 WH GCG2HE	-10% / +10%	5
911401572344	DN394B LED40/840 PSD D200 WH GCG2HE	-10% / +10%	5
911401572444	DN394B LED40/830 PSD D200 WH GCG2HE	-10% / +10%	5
911401572844	DN393B LED26/865 P20PSD D200 WH GMG2HE	-10% / +10%	5
911401572944	DN393B LED26/840 P20PSD D200 WH GMG2HE	-10% / +10%	5
911401573044	DN393B LED26/830 P20PSD D200 WH GMG2HE	-10% / +10%	5
911401573444	DN393B LED26/865 PSD D200 WH GCG2HE	-10% / +10%	5

Order Code	Full Product Name	Luminous flux tolerance	Initial chromaticity
911401573544	DN393B LED26/840 PSD D200 WH GCG2HE	-10% / +10%	5
911401573644	DN393B LED26/830 PSD D200 WH GCG2HE	-10% / +10%	5
911401575244	DN392B LED18/865 P14PSD D200 WH GMG2HE	-10% / +10%	5
911401575344	DN392B LED18/840 P14PSD D200 WH GMG2HE	-10% / +10%	5
911401575444	DN392B LED18/830 P14PSD D200 WH GMG2HE	-10% / +10%	5
911401575844	DN392B LED18/865 PSD D200 WH GCG2HE	-10% / +10%	5
911401575944	DN392B LED18/840 PSD D200 WH GCG2HE	-10% / +10%	5
911401576044	DN392B LED18/830 PSD D200 WH GCG2HE	-10% / +10%	5
911401586932	DN393B LED22/840 P20PSU D200 WH CAUG2	+/-10%	5
911401588632	DN393B LED22/840 P20PSU D200 WH WP CAUG2	+/-10%	5
911401539144	DN394X LED40/840 L1W D200 WH GCG2HE	-10% / +10%	-
911401539344	DN393X LED26/840 L1W D200 WH GCG2HE	-10% / +10%	-
911401540144	DN394X LED40/840 P29L1W D200 WH GMG2HE	-10% / +10%	-
911401540344	DN393X LED26/840 P20L1W D200 WH GMG2HE	-10% / +10%	-
911401503545	DN394X LED33/9TNW P27PSD D200 AL WP G2	+/-10%	SDCM5
911401520744	DN394B LED38/865 P29PSU D200 ALWP GMG2HE	+/-10%	5
911401520844	DN394B LED38/840 P29PSU D200 ALWP GMG2HE	+/-10%	5
911401520944	DN394B LED38/830 P29PSU D200 ALWP GMG2HE	+/-10%	5
911401521044	DN394B LED38/865 PSU D200 AL WP GCG2HE	+/-10%	5
911401521144	DN394B LED38/840 PSU D200 AL WP GCG2HE	+/-10%	5
911401521244	DN394B LED38/830 PSU D200 AL WP GCG2HE	+/-10%	5
911401521344	DN393B LED25/865 P19PSU D200 ALWP GMG2HE	+/-10%	5
911401521444	DN393B LED25/840 P19PSU D200 ALWP GMG2HE	+/-10%	5
911401521544	DN393B LED25/830 P19PSU D200 ALWP GMG2HE	+/-10%	5
911401521644	DN393B LED25/865 PSU D200 AL WP GCG2HE	+/-10%	5
911401521744	DN393B LED25/840 PSU D200 AL WP GCG2HE	+/-10%	5
911401521844	DN393B LED25/830 PSU D200 AL WP GCG2HE	+/-10%	5
911401522544	DN392B LED18/865 P14PSU D200 ALWP GMG2HE	+/-10%	5
911401522644	DN392B LED18/840 P14PSU D200 ALWP GMG2HE	+/-10%	5
911401522744	DN392B LED18/830 P14PSU D200 ALWP GMG2HE	+/-10%	5
911401522844	DN392B LED18/865 PSU D200 AL WP GCG2HE	+/-10%	5
911401522944	DN392B LED18/840 PSU D200 AL WP GCG2HE	+/-10%	5
911401523044	DN392B LED18/830 PSU D200 AL WP GCG2HE	+/-10%	5
911401526144	DN394B LED38/865 P29PSU D200 AL GMG2HE	+/-10%	5
911401526244	DN394B LED38/840 P29PSU D200 AL GMG2HE	+/-10%	5
911401526344	DN394B LED38/830 P29PSU D200 AL GMG2HE	+/-10%	5
911401526744	DN394B LED38/865 PSU D200 AL GCG2HE	+/-10%	5
911401526844	DN394B LED38/840 PSU D200 AL GCG2HE	+/-10%	5
911401526944	DN394B LED38/830 PSU D200 AL GCG2HE	+/-10%	5
911401527344	DN393B LED25/865 P19PSU D200 AL GMG2HE	+/-10%	5
911401527444	DN393B LED25/840 P19PSU D200 AL GMG2HE	+/-10%	5
911401527544	DN393B LED25/830 P19PSU D200 AL GMG2HE	+/-10%	5

Order Code	Full Product Name	Luminous flux tolerance	Initial chromaticity
911401527944	DN393B LED25/865 PSU D200 AL GCG2HE	+/-10%	5
911401528044	DN393B LED25/840 PSU D200 AL GCG2HE	+/-10%	5
911401528144	DN393B LED25/830 PSU D200 AL GCG2HE	+/-10%	5
911401529744	DN392B LED18/865 P14PSU D200 AL GMG2HE	+/-10%	5
911401529844	DN392B LED18/840 P14PSU D200 AL GMG2HE	+/-10%	5
911401529944	DN392B LED18/830 P14PSU D200 AL GMG2HE	+/-10%	5
911401530344	DN392B LED18/865 PSU D200 AL GCG2HE	+/-10%	5
911401530444	DN392B LED18/840 PSU D200 AL GCG2HE	+/-10%	5
911401530544	DN392B LED18/830 PSU D200 AL GCG2HE	+/-10%	5
911401537044	DN393X LED25/865 P20WIA D200 AL G2HE	+/-10%	5
911401537644	DN393X LED25/830 P20WIA D200 AL G2HE	+/-10%	5
911401538244	DN393X LED25/840 P20WIA D200 AL G2HE	+/-10%	5
911401566844	DN394B LED38/865 P29PSD D200 ALWP GMG2HE	-10% / +10%	5
911401566944	DN394B LED38/840 P29PSD D200 ALWP GMG2HE	-10% / +10%	5
911401567044	DN394B LED38/830 P29PSD D200 ALWP GMG2HE	-10% / +10%	5
911401567144	DN394B LED38/865 PSD D200 AL WP GCG2HE	-10% / +10%	5
911401567244	DN394B LED38/840 PSD D200 AL WP GCG2HE	-10% / +10%	5
911401567344	DN394B LED38/830 PSD D200 AL WP GCG2HE	-10% / +10%	5
911401567444	DN393B LED25/865 P20PSD D200 ALWP GMG2HE	-10% / +10%	5
911401567544	DN393B LED25/840 P20PSD D200 ALWP GMG2HE	-10% / +10%	5
911401567644	DN393B LED25/830 P20PSD D200 ALWP GMG2HE	-10% / +10%	5
911401567744	DN393B LED25/865 PSD D200 AL WP GCG2HE	-10% / +10%	5
911401567844	DN393B LED25/840 PSD D200 AL WP GCG2HE	-10% / +10%	5
911401567944	DN393B LED25/830 PSD D200 AL WP GCG2HE	-10% / +10%	5
911401568644	DN392B LED18/865 P14PSD D200 ALWP GMG2HE	-10% / +10%	5
911401568744	DN392B LED18/840 P14PSD D200 ALWP GMG2HE	-10% / +10%	5
911401568844	DN392B LED18/830 P14PSD D200 ALWP GMG2HE	-10% / +10%	5
911401568944	DN392B LED18/865 PSD D200 AL WP GCG2HE	-10% / +10%	5
911401569044	DN392B LED18/840 PSD D200 AL WP GCG2HE	-10% / +10%	5
911401569144	DN392B LED18/830 PSD D200 AL WP GCG2HE	-10% / +10%	5
911401571344	DN394B LED38/865 P29PSD D200 AL GMG2HE	-10% / +10%	5
911401571444	DN394B LED38/840 P29PSD D200 AL GMG2HE	-10% / +10%	5
911401571544	DN394B LED38/830 P29PSD D200 AL GMG2HE	-10% / +10%	5
911401571944	DN394B LED38/865 PSD D200 AL GCG2HE	-10% / +10%	5
911401572044	DN394B LED38/840 PSD D200 AL GCG2HE	-10% / +10%	5
911401572144	DN394B LED38/830 PSD D200 AL GCG2HE	-10% / +10%	5
911401572544	DN393B LED25/865 P20PSD D200 AL GMG2HE	-10% / +10%	5
911401572644	DN393B LED25/840 P20PSD D200 AL GMG2HE	-10% / +10%	5
911401572744	DN393B LED25/830 P20PSD D200 AL GMG2HE	-10% / +10%	5
911401573144	DN393B LED25/865 PSD D200 AL GCG2HE	-10% / +10%	5
911401573244	DN393B LED25/840 PSD D200 AL GCG2HE	-10% / +10%	5
911401573344	DN393B LED25/830 PSD D200 AL GCG2HE	-10% / +10%	5

Order Code	Full Product Name	Luminous flux tolerance	Initial chromaticity
911401574944	DN392B LED18/865 P14PSD D200 AL GMG2HE	-10% / +10%	5
911401575044	DN392B LED18/840 P14PSD D200 AL GMG2HE	-10% / +10%	5
911401575144	DN392B LED18/830 P14PSD D200 AL GMG2HE	-10% / +10%	5
911401575544	DN392B LED18/865 PSD D200 AL GCG2HE	-10% / +10%	5
911401575644	DN392B LED18/840 PSD D200 AL GCG2HE	-10% / +10%	5
911401575744	DN392B LED18/830 PSD D200 AL GCG2HE	-10% / +10%	5
911401577042	DN393X LED22/840 P20L1W D200 WH CAUG2	+/-10%	5
911401577542	DN392X LED17/840 P15L1W D150 WH CAUG2	+/-10%	5
911401538844	DN392X LED20/840 L1W D150 WH GCG2HE	-10% / +10%	-
911401539544	DN392X LED22/840 L1W D150 WH GCG2HE	-10% / +10%	-
911401539944	DN392X LED20/840 P15L1W D150 WH GMG2HE	-10% / +10%	-
911401540544	DN392X LED22/840 P17L1W D150 WH GMG2HE	-10% / +10%	-
911401503945	DN392X LED17/9TNW P15PSD D150 WH WP G2	+/-10%	SDCM5
911401504245	DN392X LED17/9TNW P15PSD D150 WH WPCAUG2	+/-10%	SDCM5
911401520044	DN392B LED20/840 P15PSU D150WHWP CAUG2HE	+/-10%	5
911401520144	DN391B LED13/840 P11PSU D150WHWP CAUG2HE	+/-10%	5
911401520444	DN392B LED20/840 P15PSU D150 WH CAUG2HE	+/-10%	5
911401520544	DN391B LED13/840 P11PSU D150 WH CAUG2HE	+/-10%	5
911401528844	DN392B LED22/865 P16PSU D150 WH GMG2HE	+/-10%	5
911401528944	DN392B LED22/840 P16PSU D150 WH GMG2HE	+/-10%	5
911401529044	DN392B LED22/830 P16PSU D150 WH GMG2HE	+/-10%	5
911401529444	DN392B LED22/865 PSU D150 WH GCG2HE	+/-10%	5
911401529544	DN392B LED22/840 PSU D150 WH GCG2HE	+/-10%	5
911401529644	DN392B LED22/830 PSU D150 WH GCG2HE	+/-10%	5
911401531244	DN392B LED20/865 P14PSU D150 WH GMG2HE	+/-10%	5
911401531344	DN392B LED20/840 P14PSU D150 WH GMG2HE	+/-10%	5
911401531444	DN392B LED20/830 P14PSU D150 WH GMG2HE	+/-10%	5
911401531844	DN392B LED20/865 PSU D150 WH GCG2HE	+/-10%	5
911401531944	DN392B LED20/840 PSU D150 WH GCG2HE	+/-10%	5
911401532044	DN392B LED20/830 PSU D150 WH GCG2HE	+/-10%	5
911401532444	DN391B LED13/865 P10PSU D150 WH GMG2HE	+/-10%	5
911401532544	DN391B LED13/840 P10PSU D150 WH GMG2HE	+/-10%	5
911401532644	DN391B LED13/830 P10PSU D150 WH GMG2HE	+/-10%	5
911401533044	DN391B LED13/865 PSU D150 WH GCG2HE	+/-10%	5
911401533144	DN391B LED13/840 PSU D150 WH GCG2HE	+/-10%	5
911401533244	DN391B LED13/830 PSU D150 WH GCG2HE	+/-10%	5
911401537344	DN392X LED20/865 P15WIA D150 WH G2HE	+/-10%	5
911401537944	DN392X LED20/830 P15WIA D150 WH G2HE	+/-10%	5
911401538544	DN392X LED20/840 P15WIA D150 WH G2HE	+/-10%	5
911401566544	DN392B LED19/865 P14PSD D150 WH GMG2HE	-10% / +10%	5
911401566644	DN392B LED19/840 P14PSD D150 WH GMG2HE	-10% / +10%	5
911401566744	DN392B LED19/830 P14PSD D150 WH GMG2HE	-10% / +10%	5

Order Code	Full Product Name	Luminous flux tolerance	Initial chromaticity
911401574044	DN392B LED23/865 P17PSD D150 WH GMG2HE	-10% / +10%	5
911401574144	DN392B LED23/840 P17PSD D150 WH GMG2HE	-10% / +10%	5
911401574244	DN392B LED23/830 P17PSD D150 WH GMG2HE	-10% / +10%	5
911401574644	DN392B LED23/865 PSD D150 WH GCG2HE	-10% / +10%	5
911401574744	DN392B LED23/840 PSD D150 WH GCG2HE	-10% / +10%	5
911401574844	DN392B LED23/830 PSD D150 WH GCG2HE	-10% / +10%	5
911401576444	DN392B LED19/865 PSD D150 WH GCG2HE	-10% / +10%	5
911401576544	DN392B LED19/840 PSD D150 WH GCG2HE	-10% / +10%	5
911401576644	DN392B LED19/830 PSD D150 WH GCG2HE	-10% / +10%	5
911401577044	DN391B LED13/865 P11PSD D150 WH GMG2HE	-10% / +10%	5
911401577144	DN391B LED13/840 P11PSD D150 WH GMG2HE	-10% / +10%	5
911401577244	DN391B LED13/830 P11PSD D150 WH GMG2HE	-10% / +10%	5
911401577644	DN391B LED13/865 PSD D150 WH GCG2HE	-10% / +10%	5
911401577744	DN391B LED13/840 PSD D150 WH GCG2HE	-10% / +10%	5
911401577844	DN391B LED13/830 PSD D150 WH GCG2HE	-10% / +10%	5
911401585532	DN391B LED11/840 P11PSU D150 WH CAUG2	+/-10%	5
911401587832	DN391B LED11/840 P11PSU D150 WH WP CAUG2	+/-10%	5
911401587932	DN392B LED17/840 P15PSU D150 WH WP CAUG2	+/-10%	5
911401538944	DN392X LED18/840 L1W D150 AL GCG2HE	-10% / +10%	-
911401539444	DN392X LED20/840 L1W D150 AL GCG2HE	-10% / +10%	-
911401539844	DN392X LED18/840 P15L1W D150 AL GMG2HE	-10% / +10%	-
911401540444	DN392X LED20/840 P17L1W D150 AL GMG2HE	-10% / +10%	-

© 2026 Signify Holding. All rights reserved. The information provided herein is subject to change, without notice. Signify does not give any representation or warranty as to the accuracy or completeness of the information included herein and shall not be liable for any action in reliance thereon. The information presented in this document is not intended as any commercial offer and does not form part of any quotation or contract, unless otherwise agreed by Signify. Philips and the Philips Shield Emblem are registered trademarks of Koninklijke Philips N.V.