Signify

Copenhagen City Comfort LED small

BDS861



Copenhagen City Comfort LED small: the iconic design crafted to ensure unmatched comfort and a lower ecological impact

The original Copenhagen luminaire was co-designed with Copenhagen's Office of City Architecture in the 1960s. This timeless icon of urban lighting is now available in three versions: Copenhagen LED gen2, delivering high performance for road lighting; Copenhagen City LED gen2, ideal for city and residential areas where visual comfort and cohesive design language are valued; and Copenhagen City Comfort LED, tailored for sensitive inner-city zones where controlling light pollution and ensuring maximum visual comfort are essential. Available in two variants—Copenhagen City Comfort (BRS862) and Xtra Comfort (BRS962)—the range offers superior lighting comfort. It ensures gentle, non-disturbing illumination, enhancing the living experience for residents. The Xtra Comfort version delivers even greater spill light control, significantly reducing light cast onto nearby façades in inner-city environments. Built with sustainable materials, including a bio-based plastic canopy and recycled aluminium components, the luminaire helps reduce carbon emissions and supports eco-conscious urban planning. The luminaire is available with one or two Zhaga-D4i (ZD4i) system-ready sockets, making it future-proof and ready for smart city

applications such as Interact. Thanks to the use of plastic, the top socket is seamlessly integrated into the canopy without compromising the luminaire’s clean design.

Benefits

- Iconic design co-created with Copenhagen's Office of City Architecture in the 1960s, available in multiple sizes for a consistent and elegant cityscape across all urban areas.
- Pleasant and comfortable atmosphere for residents by offering very high optical comfort without glare.
- Reduced amount of light pollution through better spill light control.
- Reduced carbon emissions: Constructed with sustainable materials, utilizing bio-based polyethylene and recycled aluminium, resulting in a 40% lower carbon footprint during the product stage (A1–A3). It also features a design with replaceable and recyclable components to support circularity.
- Future-ready with Zhaga-D4i SR sockets, enabling connection with Interact controls and sensors without compromising the luminaire’s clean design.

Applications

- Inner city residential streets,
- Narrow city streets,
- Inner city open areas,
- Pedestrian streets,
- Smaller shopping streets

Features

- LED engine recessed for a more pleasant lighting experience.
- Superior visual comfort, demonstrated by a high glare index class (D6) and luminous intensity class (G*6).
- Canopy is made from 88% bio-based plastic and metal parts are manufactured from 88% recycled aluminum.
- Multiple mounting options: side entry, wall arm, post-top, catenary, or central fixing.
- Efficacy up to 157 lm/W.

Versions



Copenhagen City Xtra Comfort small suspended/ Wire with Zhaga socket



Copenhagen City Xtra Comfort LED small side-entry



Copenhagen City Comfort LED small suspended



Copenhagen City Comfort LED small center 3/4" thread pendant



Copenhagen City Comfort LED small with post-top bracket



Copenhagen City Xtra Comfort LED small with post-top bracket



Copenhagen City Xtra Comfort small center, 3/4" thread with Zhaga socket



Copenhagen City Comfort LED small side-entry

Dimensional drawing

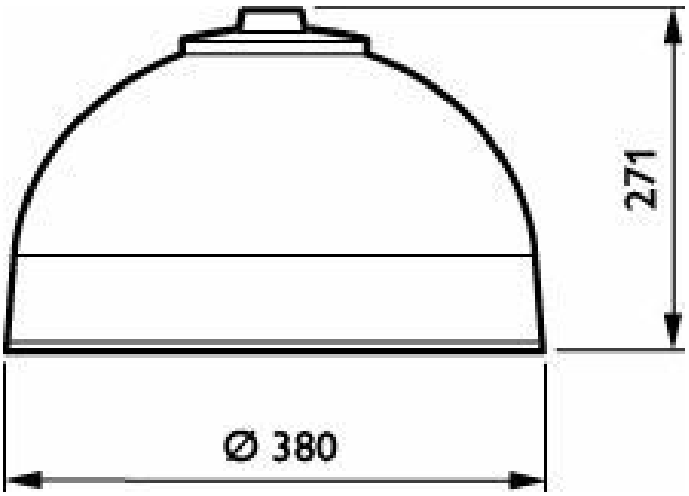

BDS961 LED40/830 II DM32 9005 CLOSRTB 10

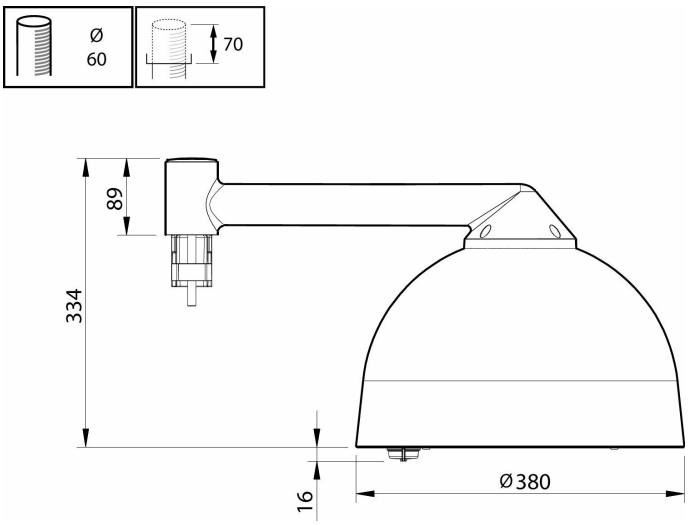

BPS961 LED40/830 II DM32 9005 DDF12 10

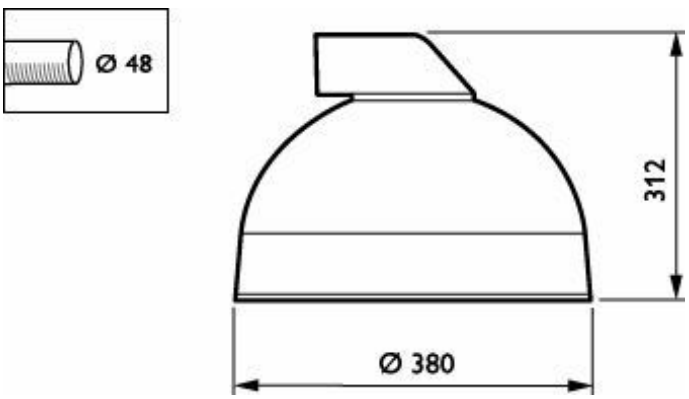

BRS961 LED40/830 II DM32 9005 DDF12 10

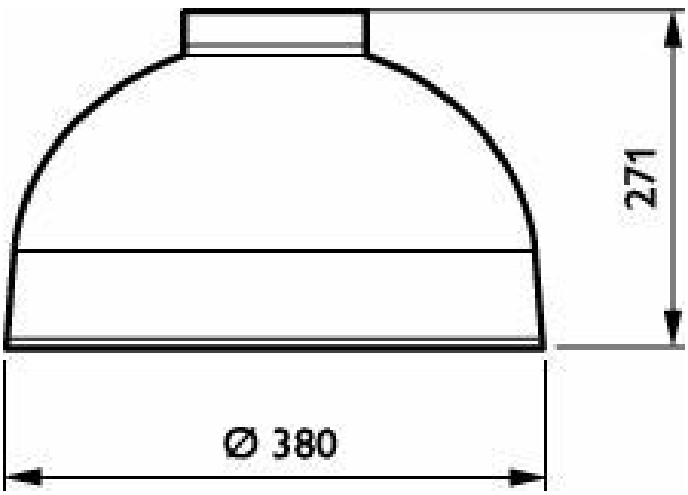

BSS861 LED40/830 II DM32 GR CLO SRTB 10

Product details



Copenhagen City Comfort LED small bottom view



Copenhagen City Xtra Comfort LED small bottom view

General Information

Lamp family code	LED40S [LED module, system flux 4000 lm]
Light source replaceable	Yes
Number of gear units	1 unit
Driver included	Yes
Service tag	Yes

Light Technical

Upward light output ratio	0
Correlated Color Temperature (Nom)	3000 K
Color rendering index (CRI)	>80
Light source color	830 warm white
Luminaire light beam spread	-
Optic type outdoor	Distribution medium 32

Operating and Electrical

Power Consumption	29 W
Surge Protection (Common/ Differential)	Standard surge protection + electro static discharge protection kV

Mechanical and Housing

Ingress protection code	IP66 [Dust penetration-protected, jet-proof]
Mech. impact protection code	IK08 [5 J vandal-protected]
Standard tilt angle posttop	-
Standard tilt angle side entry	-
Optical cover type	Tempered glass

Emergency Operation

Central Emergency	No

Approval and Application

Flammability mark	-
CE mark	Yes

Light Technical

Order Code	Full Product Name	Luminous Flux
919008636893	BSS961 LED40/830 II DM32 GR CLO SRTB 10	1,244 lm
919008636892	BRS961 LED40/830 II DM32 9005 DDF12 10	1,244 lm
919008636890	BSS861 LED40/830 II DM32 GR CLO SRTB 10	1,840 lm
919008636891	BDS861 LED40/830 II DM32 GW CLO SRTB 10	1,840 lm
919008636925	BPS861 LED40/830 II DM32 GW CLO DDF12 10	1,840 lm
919008636926	BPS961 LED40/830 II DM32 9005 DDF12 10	1,244 lm
919008636894	BDS961 LED40/830 II DM32 9005 CLOSRTB 10	1,244 lm
919008636889	BRS861 LED40/830 II DM32 GW CLO DDF12 10	1,840 lm

Controls and Dimming

Order Code	Full Product Name	Dimmable
919008636893	BSS961 LED40/830 II DM32 GR CLO SRTB 10	No
919008636892	BRS961 LED40/830 II DM32 9005 DDF12 10	No
919008636890	BSS861 LED40/830 II DM32 GR CLO SRTB 10	Yes
919008636891	BDS861 LED40/830 II DM32 GW CLO SRTB 10	Yes
919008636925	BPS861 LED40/830 II DM32 GW CLO DDF12 10	Yes
919008636926	BPS961 LED40/830 II DM32 9005 DDF12 10	Yes
919008636894	BDS961 LED40/830 II DM32 9005 CLOSRTB 10	No
919008636889	BRS861 LED40/830 II DM32 GW CLO DDF12 10	Yes

Mechanical and Housing

Order Code	Full Product Name	Housing Color
919008636893	BSS961 LED40/830 II DM32 GR CLO SRTB 10	Gray
919008636892	BRS961 LED40/830 II DM32 9005 DDF12 10	Black
919008636890	BSS861 LED40/830 II DM32 GR CLO SRTB 10	Gray
919008636891	BDS861 LED40/830 II DM32 GW CLO SRTB 10	Opal
919008636925	BPS861 LED40/830 II DM32 GW CLO DDF12 10	Black
919008636926	BPS961 LED40/830 II DM32 9005 DDF12 10	Black
919008636894	BDS961 LED40/830 II DM32 9005 CLOSRTB 10	Black
919008636889	BRS861 LED40/830 II DM32 GW CLO DDF12 10	Opal

Product Data

Order Code	Full Product Name	Product family code
919008636893	BSS961 LED40/830 II DM32 GR CLO SRTB 10	BSS961
919008636892	BRS961 LED40/830 II DM32 9005 DDF12 10	BRS961
919008636890	BSS861 LED40/830 II DM32 GR CLO SRTB 10	BSS861
919008636891	BDS861 LED40/830 II DM32 GW CLO SRTB 10	BDS861
919008636925	BPS861 LED40/830 II DM32 GW CLO DDF12 10	BPS861
919008636926	BPS961 LED40/830 II DM32 9005 DDF12 10	BPS961
919008636894	BDS961 LED40/830 II DM32 9005 CLOSRTB 10	BDS961
919008636889	BRS861 LED40/830 II DM32 GW CLO DDF12 10	BRS861

Polar normal diagrams

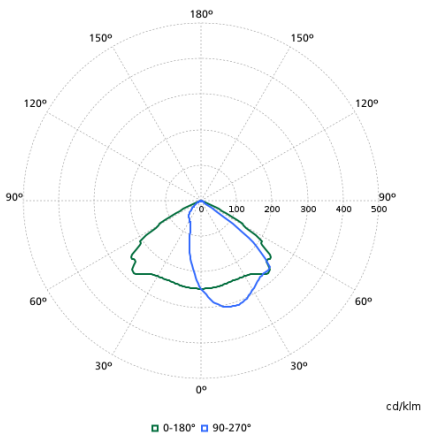

BDS961 LED40/830 II DM32 9005 CLOSRTB 10 919008636894

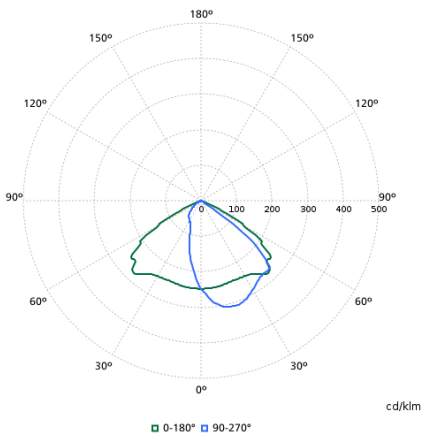

BSS961 LED40/830 II DM32 GR CLO SRTB 10 919008636893

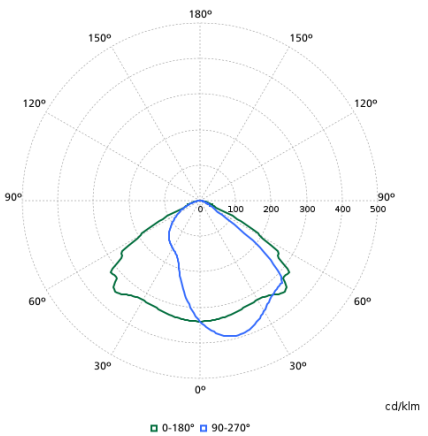

BSS861 LED40/830 II DM32 GR CLO SRTB 10 919008636890

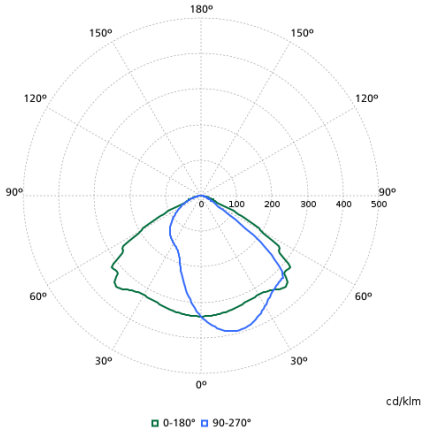

BRS861 LED40/830 II DM32 GW CLO DDF12 10 919008636889

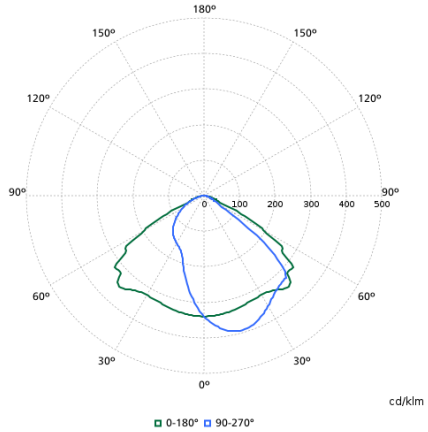

BDS861 LED40/830 II DM32 GW CLO SRTB 10 919008636891

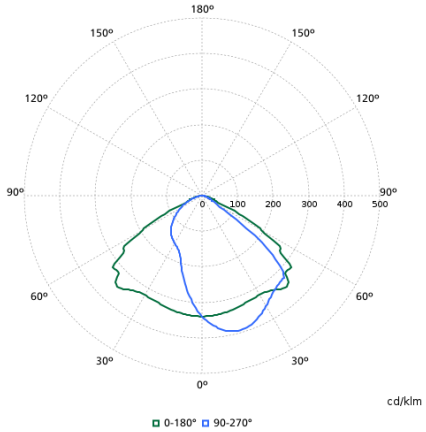

BPS861 LED40/830 II DM32 GW CLO DDF12 10 919008636925

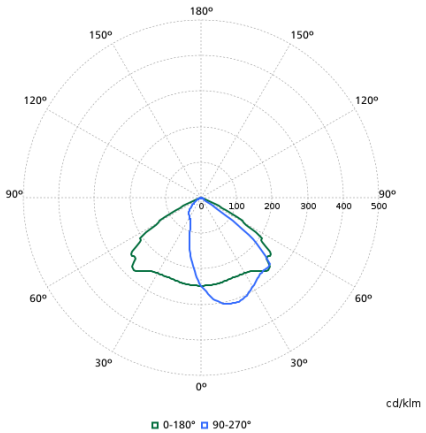

BPS961 LED40/830 II DM32 9005 DDF12 10 919008636926

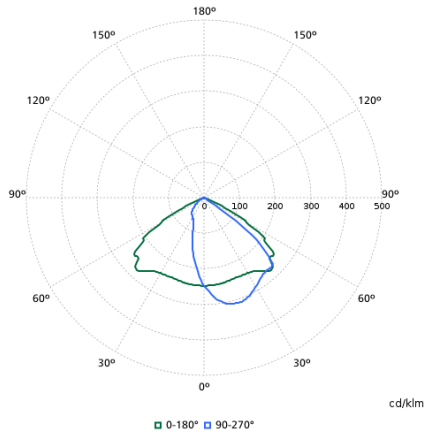

BRS961 LED40/830 II DM32 9005 DDF12 10 919008636892

© 2026 Signify Holding. All rights reserved. The information provided herein is subject to change, without notice. Signify does not give any representation or warranty as to the accuracy or completeness of the information included herein and shall not be liable for any action in reliance thereon. The information presented in this document is not intended as any commercial offer and does not form part of any quotation or contract, unless otherwise agreed by Signify. All trademarks are owned by Signify Holding or their respective owners.