JPP490 MBP-T 650 60 RAL

912401451375



Pole-mounting bracket 2 arms 180°, 650 mm, 60 mm, RAL color

CityCharm is designed for use in urban areas where comfortable lighting, ambiance and design play an important role. Its unobtrusive appearance makes it a timeless, future-proof luminaire that is ideal for residential areas, parks, footpaths and cycle lanes, where visual comfort and maximum efficiency are key. CityCharm offers a choice of two iconic designs (Cordoba and Cone) and various accessories, enabling you to create a lighting solution that carries your signature, both by day and by night. CityCharm luminaires are also available as a complete set, with a choice of dedicated poles and brackets.

Mechanical and Housing

Fixation diameter	Mounting device diameter 60 mm
Bracket tilt angle	0°
Bracket to luminaire diameter	60 mm
Bracket length	650 mm
Bracket color	RAL color
Bracket type	Pole-mounting bracket 2 arms 180°
Net Weight (Piece)	10.000 kg

Approval and Application

CE mark	Yes
EU RoHS compliant	Yes

Sustainability Data

Non-virgin material ratio of the packaging	Cardboard > 80% recycled
Packaging Recyclable content ratio	Cardboard recycling rate > 80%
Packaging Material	Cardboard

Dimensional drawing

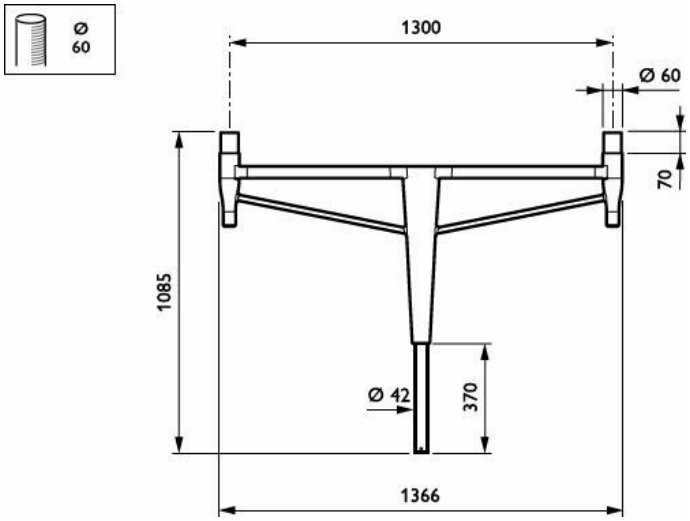

Product Data

Order product name	JPP490 MBP-T 650 60 RAL
Full product name	JPP490 MBP-T 650 60 RAL
Full product code	871869693480700
Order code	912401451375
Material Nr. (12NC)	912401451375
Numerator - Quantity Per Pack	1
EAN/UPC - Product/Case	8718696934807
Numerator - Packs per outer box	1
EAN/UPC - Case	8718696934807

© 2026 Signify Holding. All rights reserved. The information provided herein is subject to change, without notice. Signify does not give any representation or warranty as to the accuracy or completeness of the information included herein and shall not be liable for any action in reliance thereon. The information presented in this document is not intended as any commercial offer and does not form part of any quotation or contract, unless otherwise agreed by Signify. All trademarks are owned by Signify Holding or their respective owners.