PHILIPS

HF-Performer Intelligent for TL5 HE/HO lamps

HFPT5INT



For flexibility in luminaire design and stock-keeping management

HF-Performer Intelligent for Master and ECO TL5 HE/HO, TL-D and PL-L lamps. HF-Performer Intelligent features automatic recognition of the connected lamp and is independently able to adjust its operation parameters exactly to the respective lamp. This results in a substantial benefit, especially for T5 lamps, as it means TL5 HE and HO lamps of the same length can be interchanged. With a choice of seven ballasts, the customer is able to handle efficiently every possible combination of Master TL5 and Eco, TL-D, and PL-L lamps. The ballast is primarily designed for Indoor application. For outdoor application, the luminaire should be minimum ClassIand need to be sufficiently protected against water & dust. The installation should also be guard against any lightening surge or any other necessary electrical protection as deemed in such typical installation & application.

Benefits

- Maximum reliability in system operation, and flexibility for designers, operators and facility managers in terms of stock-keeping management
- Multi-power technology for precise operation of multiple lamp types of various wattages
- Optimized for high maintenance efficiency and reliability: 5-year warranty

Applications

- Suitable for DC operation and emergency lighting installations; full compliance with requirements for emergency lighting according to EN 61347-2-3-annex J
- Extended lamp life in frequent-switching applications, e.g. where occupancy sensors or motion detectors are used
- For luminaires of protection class I and protection class II used in office buildings, hospitals, supermarkets, department stores, industrial premises and schools

Features

- Highest CELMA Energy Efficiency Index A2 BAT
- Complies with CE, ENEC, EL, VDE-EMC, CCC marks of conformity
- Average nominal service lifetime over 100,000 hours (at Ta 50 °C) with a failure rate ≤ 0.1 % per 1,000 hours
- Optimized lamp preheating for a minimum of 50,000 On/Off switch operations without lamp replacement

Versions



GPPR PINTTL52 PHL

Dimensional drawing

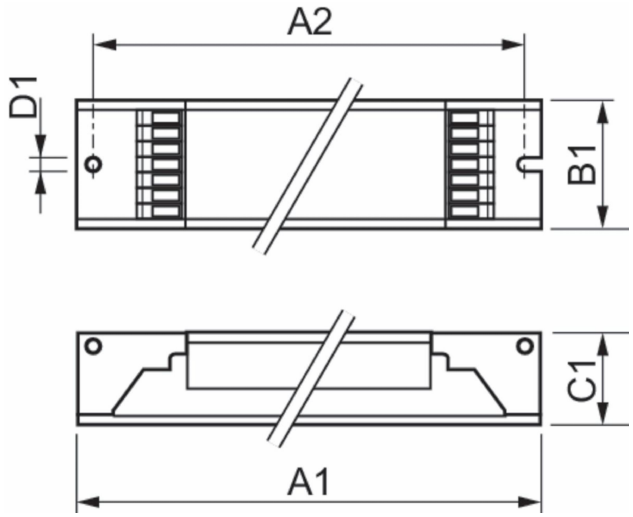

Product	D1	C1	A1	A2	B1
HF-Pi 3/4 14/24 TL5/PL-L EII 220-240V	4.2 mm	22 mm	360 mm	350 mm	30 mm

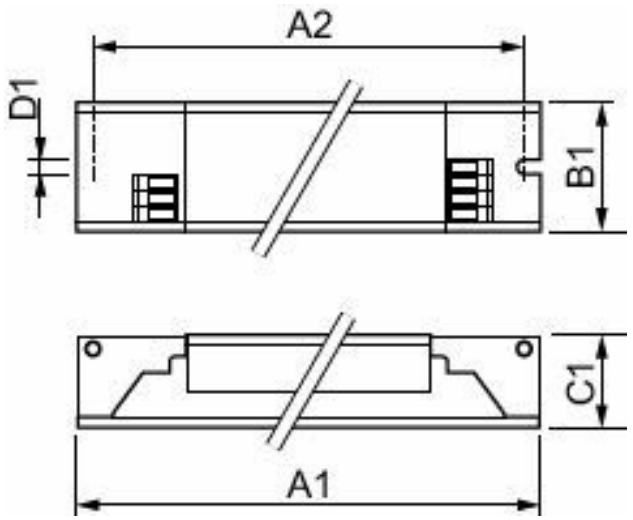

Product	D1	C1	A1	A2	B1
HF-Pi 1 28/35/49/54 TL5 EII 220-240V	4.2 mm	22 mm	360 mm	350 mm	30 mm
HF-Pi 1 28/35/49/80 TL5 EII	4.2 mm	22 mm	360 mm	350 mm	30 mm

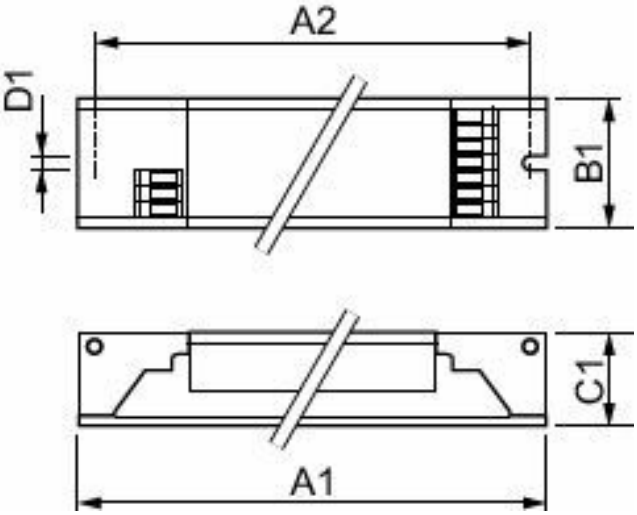

Product	D1	C1	A1	A2	B1
HF-Pi 2 28/35/49/54 TL5 EII 220-240V	4.2 mm	22 mm	360 mm	350 mm	30 mm
HF-Pi 2 28/35/49/80 TL5 EII	4.2 mm	22 mm	425 mm	415 mm	30 mm

Operating and Electrical

Input Voltage	220 to 240 V
Line Frequency	50 to 60 Hz
Input Frequency	50 to 60 Hz

Approval and Application

Energy Efficiency Index	A2 BAT

Operating and Electrical

Order Code	Full Product Name	Number of Products on MCB (16A Type B) (Nom)
913700624166	HF-Pi 1 28/35/49/54 TL5 EII 220-240V	18
913700624366	HF-Pi 2 28/35/49/54 TL5 EII 220-240V	12
913700652566	HF-Pi 1 28/35/49/80 TL5 EII	12
913700652666	HF-Pi 2 28/35/49/80 TL5 EII	8
913700657666	HF-Pi 3/4 14/24 TL5/PL-L EII 220-240V	12

Mechanical and Housing

Order Code	Full Product Name	Housing
913700624166	HF-Pi 1 28/35/49/54 TL5 EII 220-240V	L360x30x22
913700624366	HF-Pi 2 28/35/49/54 TL5 EII 220-240V	L360x30x22
913700652566	HF-Pi 1 28/35/49/80 TL5 EII	L360x30x22
913700652666	HF-Pi 2 28/35/49/80 TL5 EII	L 425x30x22
913700657666	HF-Pi 3/4 14/24 TL5/PL-L EII 220-240V	L360x30x22

© 2026 Signify Holding. All rights reserved. The information provided herein is subject to change, without notice. Signify does not give any representation or warranty as to the accuracy or completeness of the information included herein and shall not be liable for any action in reliance thereon. The information presented in this document is not intended as any commercial offer and does not form part of any quotation or contract, unless otherwise agreed by Signify. Philips and the Philips Shield Emblem are registered trademarks of Koninklijke Philips N.V.