PHILIPS

MSR Gold™ MiniFastFit (Touring/Stage)

XDMSTGMT



MSR Gold™ MiniFastFit – lamp replacement in seconds

Thanks to the specially designed lamp base, the MSR Gold™ MiniFastFit takes just seconds to replace, to help ensure non-stop clubbing entertainment. In addition, the innovative gold plated pins ensure excellent current transfer to prolong lamp and lamp holder lifetimes and thereby reduce lamp replacement costs. Easy handling and small compact fixture designs are allowed by the lamps compact size, while the very short arc provides a high perceived brightness and high beam intensity.

Benefits

- Lamp replacement in just seconds
- Easy handling, smaller and lighter fixtures
- Reduces early lamp or lamp holder failures. Excellent current transfer
- High perceived brightness
- High beam intensity

Applications

- Events
- Shows
- Touring/Stage

Features

- Philips MiniFastFit
- Compact design

- Innovative gold plated pins

- High color temperature
- Very short arc

- A lamp breaking is extremely unlikely to have any impact on your health. If a lamp breaks, ventilate the room for 30 minutes and remove the parts, preferably with gloves. Put them in a sealed plastic bag and take it to your local waste facilities for recycling. Do not use a vacuum cleaner.

Versions



MSR Gold™ 1000 MiniFastFit



XPPR_XDMSR_0008-Product photo



XPPR XDMSR 0015

Dimensional drawing

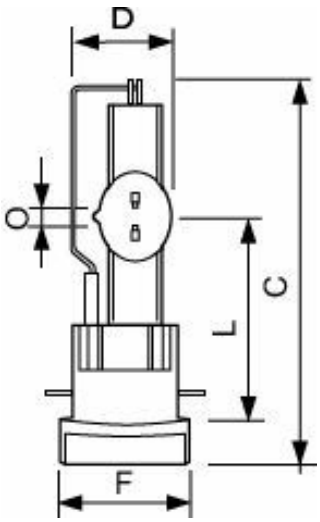

Product	D (max)	O	L (min)	L (max)	L	C (max)	F (max)	F	F (min)
MSR Gold 400 MiniFastFit 1CT/16	23.2 mm	3.0 mm	55 mm	57 mm	56 mm	111 mm	36.5 mm	36 mm	35.3 mm
MSR Gold 575/2 MiniFastFit 1CT/4	23.2 mm	3.5 mm	55 mm	57 mm	56 mm	112 mm	36.5 mm	36 mm	35.3 mm
MSR Gold 700 MiniFastFit 1CT/16	23 mm	3.5 mm	55 mm	57 mm	56 mm	116 mm	36.5 mm	36 mm	35.3 mm
MSR Gold 700/1 MiniFastFit 1CT/4	23.2 mm	3.8 mm	55 mm	57 mm	56 mm	112 mm	36.5 mm	36 mm	35.3 mm
MSR Gold 700/2 MiniFastFit 1CT/4	23.2 mm	3.8 mm	55 mm	57 mm	56 mm	112 mm	36.5 mm	36 mm	35.3 mm

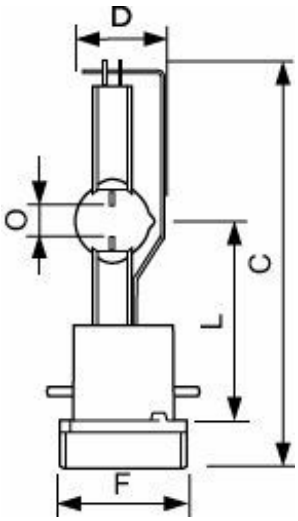

Product	D (max)	O	L (min)	L (max)	L	C (max)	F (max)	F	F (min)
MSR Gold 1000 MiniFastFit 1CT/4	26 mm	5.5 mm	55 mm	57 mm	56 mm	112 mm	36.5 mm	36 mm	35.3 mm

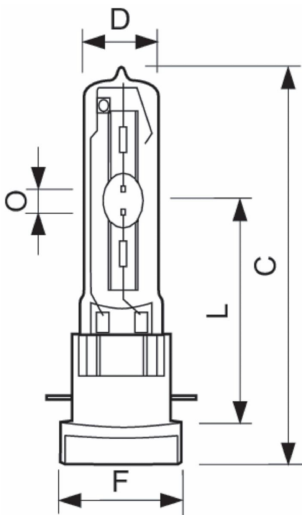

Product	D (max)	O	L (min)	L (max)	L	C (max)
MSR Gold 300/2 MiniFastFit 1CT/4	23 mm	5.0 mm	65.8 mm	67.8 mm	66.8 mm	126 mm

General Information

Operating Position	UNIVERSAL [Any or Universal (U)]

Light Technical

Luminous Flux (Min)	44,000 lm

Controls and Dimming

Dimmable	Yes

General Information

Order Code	Full Product Name	Cap-Base
928171405115	MSR Gold 1000 MiniFastFit 1CT/4	PGJX36
928177105115	MSR Gold 300/2 MiniFastFit 1CT/4	PGJX28
928184005115	MSR Gold 575/2 MiniFastFit 1CT/4	PGJX28
928194005114	MSR Gold 400 MiniFastFit 1CT/16	PGJX28
928194105114	MSR Gold 700 MiniFastFit 1CT/16	PGJX28
928197405115	MSR Gold 700/1 MiniFastFit 1CT/4	PGJX28
928199905115	MSR Gold 700/2 MiniFastFit 1CT/4	PGJX28

Light Technical

Order Code	Full Product Name	Color Code	Luminous Flux	Correlated Color Temperature (Nom)	Color rendering index (CRI)
928171405115	MSR Gold 1000 MiniFastFit 1CT/4	-	79,300 lm	6000 K	80
928177105115	MSR Gold 300/2 MiniFastFit 1CT/4	2	22,700 lm	9300 K	78
928184005115	MSR Gold 575/2 MiniFastFit 1CT/4	2	35,500 lm	7500 K	70
928194005114	MSR Gold 400 MiniFastFit 1CT/16	-	28,000 lm	6700 K	60
928194105114	MSR Gold 700 MiniFastFit 1CT/16	-	48,000 lm	6000 K	72
928197405115	MSR Gold 700/1 MiniFastFit 1CT/4	1	53,400 lm	5700 K	73
928199905115	MSR Gold 700/2 MiniFastFit 1CT/4	2	48,000 lm	7200 K	75

Operating and Electrical

Order Code	Full Product Name	Power Consumption	Lamp Current (Nom)
928171405115	MSR Gold 1000 MiniFastFit 1CT/4	1,000 W	11.4 A
928177105115	MSR Gold 300/2 MiniFastFit 1CT/4	300 W	3.75 A
928184005115	MSR Gold 575/2 MiniFastFit 1CT/4	575 W	10.2 A
928194005114	MSR Gold 400 MiniFastFit 1CT/16	400 W	7.2 A
928194105114	MSR Gold 700 MiniFastFit 1CT/16	700 W	10.8 A
928197405115	MSR Gold 700/1 MiniFastFit 1CT/4	700 W	10.2 A
928199905115	MSR Gold 700/2 MiniFastFit 1CT/4	700 W	10.2 A

© 2026 Signify Holding. All rights reserved. The information provided herein is subject to change, without notice. Signify does not give any representation or warranty as to the accuracy or completeness of the information included herein and shall not be liable for any action in reliance thereon. The information presented in this document is not intended as any commercial offer and does not form part of any quotation or contract, unless otherwise agreed by Signify. Philips and the Philips Shield Emblem are registered trademarks of Koninklijke Philips N.V.