PHILIPS

Smartbright T8 Batten

8074440



T8 LED Battens offers exceptional value. They provide quality light and substantial energy and maintenance savings compared to conventional luminaires.

Whether for a new building or renovation of an existing space, customers want lighting solutions that provide quality of light and substantial energy and maintenance savings. New T8 LED batten range is perfect replacement for traditional battens with fluorescent lamps. The process of selecting, installing, and maintaining is so easy – it's a simple switch. The range offer customer to choose from various options, standalone batten, Batten with individual switch and connectable Battens in addition to 3 CCTs and 2 Wattages.

Benefits

- Slim Design: one piece PC extrusion housing
- Different options: Standalone batten with on/off switch and additional BN013 Trunkable version
- Ease of installation: Central and side cable entry

Applications

- Retail
- Hospitality
- Offices

Features

- 30,000 Hours lifetime (L70) with 3 Years warranty
- CRI 80, SDCM <6, 100lm/W, Superior light quality combined with good energy savings
- Central and side cable entry Ready solution for both new point and replacement
- 3 CCT (3000/4000/6500k) option for different customer needs
- On/Off switch version: Easy to use

Versions



Smartbright T8 Batten



Smartbright T8 Batten



Smartbright T8 Batten

Smartbright T8 Batten



Smartbright T8 Batten

Dimensional drawing

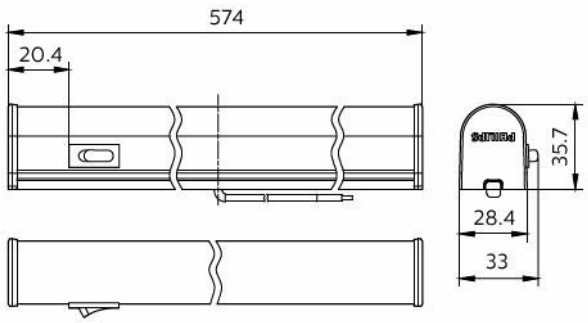

Smartbright T8 Batten

Smartbright T8 Batten

Smartbright T8 Batten

Smartbright T8 Batten

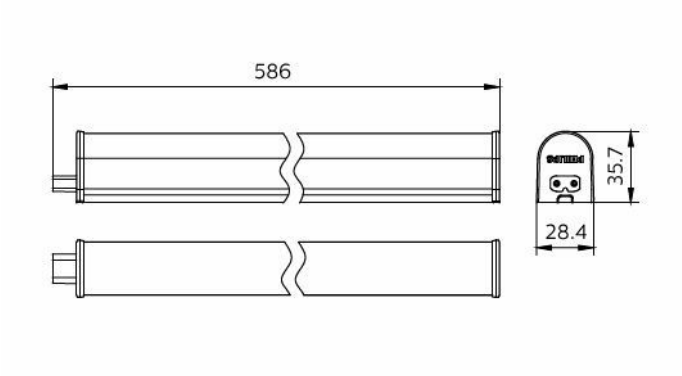

Smartbright T8 Batten

Light Technical

Luminous Efficacy (rated) (Nom)	100 lm/W
Color rendering index (CRI)	>80

Operating and Electrical

Input Voltage	220 to 240 V
Line Frequency	50 or 60 Hz
Protection class IEC	Safety class II

Controls and Dimming

Dimmable	No

Mechanical and Housing

Housing Color	White
Ingress protection code	IP20 [Finger-protected]
Mech. impact protection code	IK02 [0.2 J standard]
Optical cover type	Polycarbonate

Approval and Application

Flammability mark	For mounting on normally flammable surfaces
CE mark	Yes
Ambient temperature range	-20 to +40 °C

Initial Performance (IEC Compliant)

Luminous flux tolerance	+/-10%

Light Technical

Order Code	Full Product Name	Luminous Flux	Correlated Color Temperature (Nom)
911401808182	BN012C LED10/WW L600 G3	950 lm	3000 K
911401808282	BN012C LED10/NW L600 G3	1,000 lm	4000 K
911401808382	BN012C LED10/CW L600 G3	1,000 lm	6500 K
911401808782	BN013C LED20/WW L1200 G3	1,900 lm	3000 K
911401808882	BN013C LED20/NW L1200 G3	2,000 lm	4000 K
911401808982	BN013C LED20/CW L1200 G3	2,000 lm	6500 K
911401808582	BN012C LED10/NW L600 SW	1,000 lm	4000 K
911401808682	BN012C LED10/CW L600 SW	1,000 lm	6500 K
911401807882	BN012C LED20/WW L1200 G3	1,900 lm	3000 K
911401807982	BN012C LED20/NW L1200 G3	2,000 lm	4000 K
911401808082	BN012C LED20/CW L1200 G3	2,000 lm	6500 K
911401809082	BN013C LED10/WW L600 G3	950 lm	3000 K
911401809182	BN013C LED10/NW L600 G3	1,000 lm	4000 K
911401809282	BN013C LED10/CW L600 G3	1,000 lm	6500 K

Operating and Electrical

Order Code	Full Product Name	Power Consumption
911401808182	BN012C LED10/WW L600 G3	10 W
911401808282	BN012C LED10/NW L600 G3	10 W
911401808382	BN012C LED10/CW L600 G3	10 W
911401808782	BN013C LED20/WW L1200 G3	20 W
911401808882	BN013C LED20/NW L1200 G3	20 W
911401808982	BN013C LED20/CW L1200 G3	20 W
911401808582	BN012C LED10/NW L600 SW	10 W
911401808682	BN012C LED10/CW L600 SW	10 W
911401807882	BN012C LED20/WW L1200 G3	20 W
911401807982	BN012C LED20/NW L1200 G3	20 W
911401808082	BN012C LED20/CW L1200 G3	20 W
911401809082	BN013C LED10/WW L600 G3	10 W
911401809182	BN013C LED10/NW L600 G3	10 W
911401809282	BN013C LED10/CW L600 G3	10 W

Initial Performance (IEC Compliant)

Order Code	Full Product Name	Initial chromaticity
911401808182	BN012C LED10/WW L600 G3	0.4338, 0.403, SDCM≤6
911401808282	BN012C LED10/NW L600 G3	0.3818, 0.3797, SDCM≤6
911401808382	BN012C LED10/CW L600 G3	0.3123, 0.3282, SDCM≤6
911401808782	BN013C LED20/WW L1200 G3	0.4338, 0.403, SDCM≤5
911401808882	BN013C LED20/NW L1200 G3	0.3818, 0.3797, SDCM≤5

Order Code	Full Product Name	Initial chromaticity
911401808982	BN013C LED20/CW L1200 G3	0.3123, 0.3282, SDCM≤5
911401808582	BN012C LED10/NW L600 SW	0.3818, 0.3797, SDCM≤6
911401808682	BN012C LED10/CW L600 SW	0.3123, 0.3282, SDCM≤6
911401807882	BN012C LED20/WW L1200 G3	0.4338, 0.403, SDCM≤6
911401807982	BN012C LED20/NW L1200 G3	0.3818, 0.3797, SDCM≤6
911401808082	BN012C LED20/CW L1200 G3	0.3123, 0.3282, SDCM≤6
911401809082	BN013C LED10/WW L600 G3	0.4338, 0.403, SDCM≤5
911401809182	BN013C LED10/NW L600 G3	0.3818, 0.3797, SDCM≤5
911401809282	BN013C LED10/CW L600 G3	0.3123, 0.3282, SDCM≤5

© 2026 Signify Holding. All rights reserved. The information provided herein is subject to change, without notice. Signify does not give any representation or warranty as to the accuracy or completeness of the information included herein and shall not be liable for any action in reliance thereon. The information presented in this document is not intended as any commercial offer and does not form part of any quotation or contract, unless otherwise agreed by Signify. Philips and the Philips Shield Emblem are registered trademarks of Koninklijke Philips N.V.