PHILIPS

Uni Posttop

10575258



Uni Posttop: Urban street light targets at residential areas, pathways, plazas, etc.

The modern shaped post top attracts customers' attention with its unique, streamlined design. The fixture distributes soft and homogeneous light to pathways, residential areas thanks to the application of the reflector. Various quality test based on Philips standards offers robustness not only to its design but also functionality, delivering table and outstanding performance to customers.

Benefits

- Modern streamlined design fits various application scenarios, i.e., residential areas, pathways, plazas.
- Robust design ensures both appearance classy and quality stability.
- Soft lighting due to the application of alumina reflector.

Applications

- Road and Street
- Parks and Plazas
- Residential
- Main urban roads and streets, side and residential roads and streets
- City centers and historical areas
- Cycle and pedestrian paths, squares, parks and playgrounds

Features

- Excellent thermal management
- Optimized optics for efficient and comfortable lighting levels
- Injection die-casting aluminum body
- High- quality PC diffuser

Versions



BDS400

Dimensional drawing

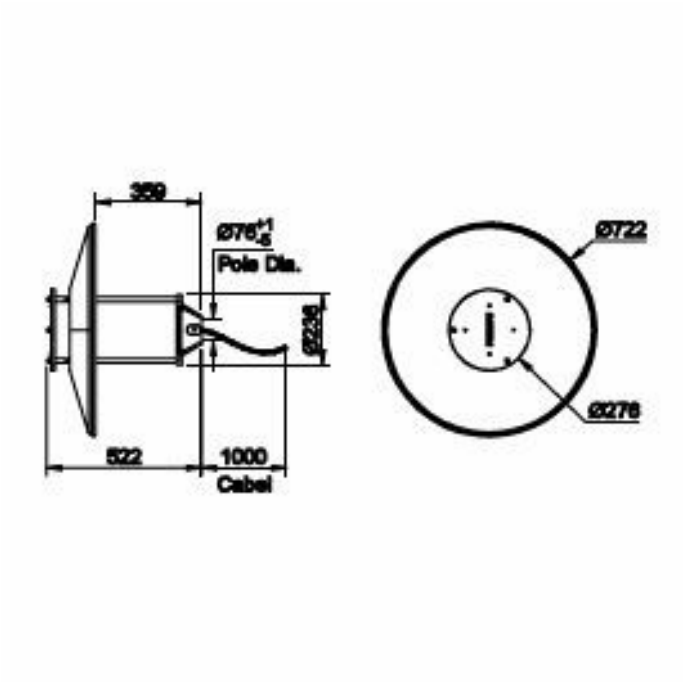

BDS400 LED NW 220V 30W WB PSU 7012

General Information

Driver included	Yes

Light Technical

Color rendering index (CRI)	70

Controls and Dimming

Dimmable	No

Mechanical and Housing

Housing Color	Gray
Ingress protection code	IP65 [Dust penetration-protected, jet-proof]
Mech. impact protection code	IK08 [5 J vandal-protected]
Optical cover type	Polycarbonate bowl/cover clear

Approval and Application

CE mark	Yes

Light Technical

Order Code	Full Product Name	Luminous Flux	Correlated Color Temperature (Nom)	Light source color
911401696308	BDS400 LED WW 220V 30W WB PSU 7012	3,900 lm	3000 K	730 warm white
911401696408	BDS400 LED WW 220V 60W WB PSU 7012	7,800 lm	3000 K	730 warm white
911401696508	BDS400 LED NW 220V 30W WB PSU 7012	4,200 lm	4000 K	740 neutral white
911401696608	BDS400 LED NW 220V 60W WB PSU 7012	8,400 lm	4000 K	740 neutral white

Operating and Electrical

Order Code	Full Product Name	Power Consumption
911401696308	BDS400 LED WW 220V 30W WB PSU 7012	30 W
911401696408	BDS400 LED WW 220V 60W WB PSU 7012	60 W
911401696508	BDS400 LED NW 220V 30W WB PSU 7012	30 W
911401696608	BDS400 LED NW 220V 60W WB PSU 7012	60 W

© 2026 Signify Holding. All rights reserved. The information provided herein is subject to change, without notice. Signify does not give any representation or warranty as to the accuracy or completeness of the information included herein and shall not be liable for any action in reliance thereon. The information presented in this document is not intended as any commercial offer and does not form part of any quotation or contract, unless otherwise agreed by Signify. Philips and the Philips Shield Emblem are registered trademarks of Koninklijke Philips N.V.