PHILIPS

## AspiraVision Compact for CDM

DAVCMPCT




# AspiraVision Compact (35, 50 & 70 W) for CDM – The smart electronic gear

AspiraVision is the mark of excellence in HID electronic gear technology – high-end, compact, lightweight and easy to use, with added features for optimal performance of 35, 50 and 70 W CDM lamps. The recently added switching function provides maximum flexibility for users by integrating three different wattage choices into a single driver.

### Benefits

- SOFT START allows installation with fewer circuit breakers; Loop Through allows faster, cost-efficient installation
- Longer lifetime
- Driver can be set to 35, 50 or 70 W with the integrated switch, which means there is no need to replace the driver if the installation requires lower or higher-wattage lamps in the future

### Applications

- Accent and decorative lighting for shops, public spaces, lobbies and offices
- Suitable for indoor use only

### Features

- SOFT START
- Loop Through (in independent version)
- Improved thermal performance

- Low electromagnetic interference
- Voltage drop detection

## Versions



GPPR IAVC 0002

## Dimensional drawing

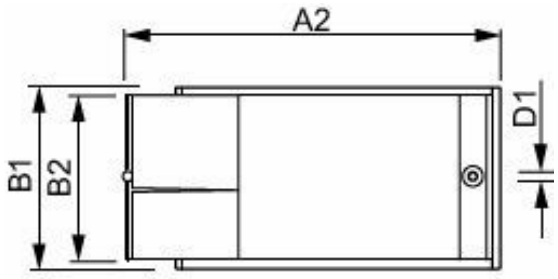


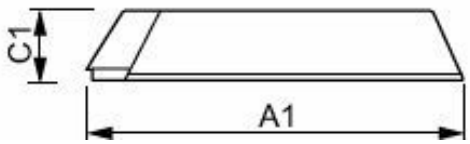


| Product | D1 | C1 | A1 | A2 | B1 |
|---|---|---|---|---|---|
| HID-AV C 35-70 /I CDM 220-240V 50/60Hz | 4.8 mm | 34.7 mm | 189.2 mm | 170.7 mm | 83.5 mm |

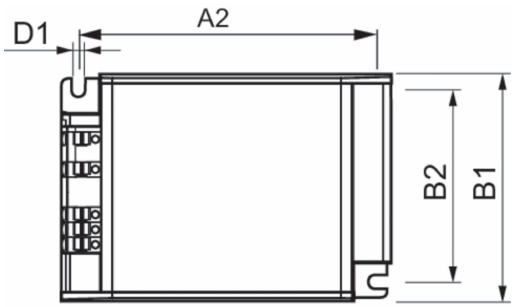


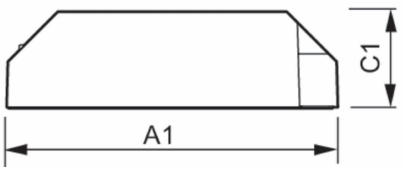


| Product | D1 | C1 | A1 | A2 | B1 | B2 |
|---|---|---|---|---|---|---|
| HID-AV C 35-70 /S CDM 220-240V 50/60Hz | 4.5 mm | 32.1 mm | 110.0 mm | 98.5 mm | 75.0 mm | 63.5 mm |

### Operating and Electrical

| | |
|---|---|
| Input Voltage | 220 to 240 V |
| Line Frequency | 50 to 60 Hz |
| Input Frequency | 50 to 60 Hz |
| Number of Products on MCB (16A Type B) (Nom) | 58 |

## Mechanical and Housing

| Order Code | Full Product Name | Housing |
|---|---|---|
| 913700683866 | HID-AV C 35-70 /S CDM 220-240V 50/60Hz | /S |
| 913700684066 | HID-AV C 35-70 /I CDM 220-240V 50/60Hz | /I |

© 2026 Signify Holding. All rights reserved. The information provided herein is subject to change, without notice. Signify does not give any representation or warranty as to the accuracy or completeness of the information included herein and shall not be liable for any action in reliance thereon. The information presented in this document is not intended as any commercial offer and does not form part of any quotation or contract, unless otherwise agreed by Signify. Philips and the Philips Shield Emblem are registered trademarks of Koninklijke Philips N.V.