**JRB435 MBP-S 750 60 48 RAL**

912401451269



# Pole-mounting bracket 1 arm, 750 mm, 60 mm, 3°, RAL color, Mounting device diameter 48 mm

The UrbanWave collection adds subtle design to a set of luminaires and an environment, by night as well as by day. The design is contemporary, stands out in its simplicity and provides great lighting efficiency.

## Light Technical

| | |
|---|---|
| Effective projected area | 0.095 m² |

## Mechanical and Housing

| | |
|---|---|
| Fixation point length distance (Nom) | 135 mm |
| Fixation diameter | Mounting device diameter 48 mm |
| Bracket tilt angle | 3° |
| Bracket to luminaire diameter | 60 mm |
| Bracket length | 750 mm |
| Bracket color | RAL color |

| | |
|---|---|
| Bracket type | Pole-mounting bracket 1 arm |
| Net Weight (Piece) | 7.500 kg |

## Approval and Application

| | |
|---|---|
| CE mark | Yes |
| EU RoHS compliant | Yes |

## Sustainability Data

| | |
|---|---|
| Non-virgin material ratio of the packaging | Cardboard > 80% recycled |
| Packaging Recyclable content ratio | Cardboard recycling rate > 80% |
| Packaging Material | Cardboard |

## Dimensional drawing

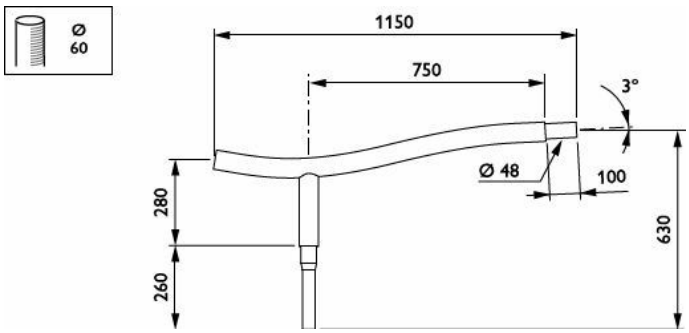


## Product Data

| | |
|---|---|
| Order product name | JRB435 MBP-S 750 60 48 RAL |
| Full product name | JRB435 MBP-S 750 60 48 RAL |
| Full product code | 871869693375600 |
| Order code | 912401451269 |
| Material Nr. (12NC) | 912401451269 |
| Numerator - Quantity Per Pack | 1 |
| EAN/UPC - Product/Case | 8718696933756 |
| Numerator - Packs per outer box | 1 |
| EAN/UPC - Case | 8718696933756 |

## Related Documents

| Photometric and IES | Document Name | Download |
|---|---|---|
| Revit file | PHL_Urbanwave_SA_bracket-JRB435_S750_D48-3D-RFA.zip | Download |

© 2026 Signify Holding. All rights reserved. The information provided herein is subject to change, without notice. Signify does not give any representation or warranty as to the accuracy or completeness of the information included herein and shall not be liable for any action in reliance thereon. The information presented in this document is not intended as any commercial offer and does not form part of any quotation or contract, unless otherwise agreed by Signify. All trademarks are owned by Signify Holding or their respective owners.