PHILIPS

UniFlood C Pro

BVP371



Architectural LED floodlight for fixed or dynamic lighting

Philips UniFlood C Pro offers a unique rugged elegance, with a cylindrical form and flowing lines that connect the front and back housings beautifully. This is compact architectural floodlighting design where every element has a purpose; the front section provides exceptional lighting, while the back section houses all the electrical components. Between the two, the fins dissipate heat and also serve as a decorative element. Exterior-rated, Philips UniFlood C Pro is a cost-effective, architectural LED floodlight that is designed for façade, landscape and outdoor floodlighting applications. The robust mechanical design and high-efficiency optics make it ideal for illuminating multi-story exterior façades, bridges, landmarks and monuments. Architects and designers have the freedom to explore a wide range of concepts and designs with no limitations, thanks to a range of colors, multiple spread lenses and a DMX512/RDM control option.

Benefits

- Available in white, monochromatic colors, RGB, RGBW and tunable white
- Wide range of beam angles from Narrow Spot to Wide Flood
- Available in DMX512/RDM control interface option

Applications

- Bridges, Monuments, Façades
- Landscape
- Parks and Plazas

Features

- Robust design, IP66 rated for outdoor use
- Optical distributions: 3.5°, 10°, 15°, 30°, 45° and 60°
- Adjustable ±90° tilting angle
- Through wiring for DMX signal via dedicated cables with IP67 connectors
- For outdoor use only

Versions

UniFlood C Pro



UniFlood C Pro



UniFlood C Pro



UniFlood C Pro



Dimensional drawing

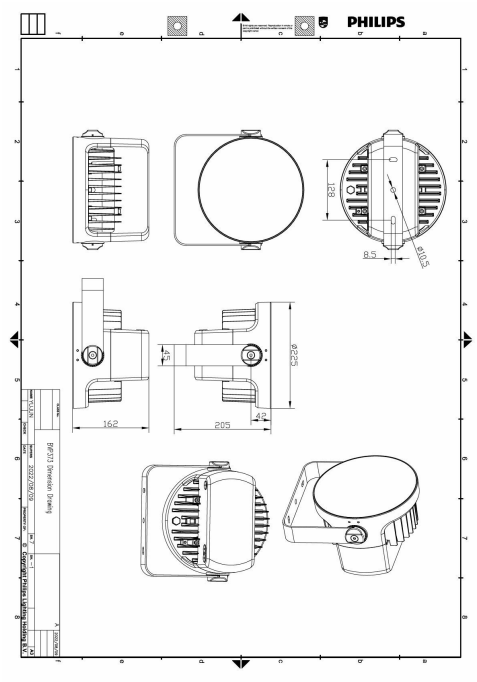

UniFlood C Pro - 100 W - - K



UniFlood C Pro - 24 W - 2700 K

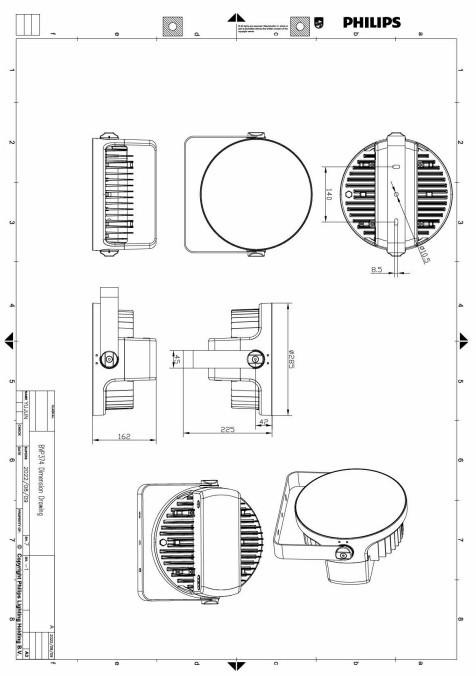

UniFlood C Pro - 120 W - 2700 K

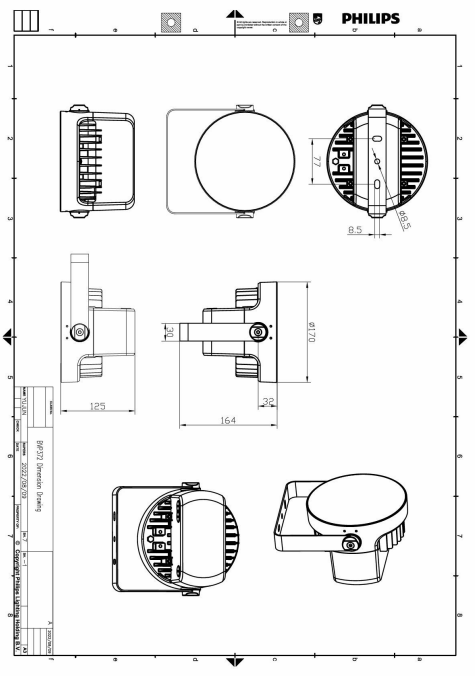

UniFlood C Pro - 50 W - 4000 K

General Information

Driver included	Yes

Mechanical and Housing

Housing Color	Dark gray
Ingress protection code	IP66 [Dust penetration-protected, jet-proof]
Mech. impact protection code	IK06 [1 J]
Optical cover type	Clear glass

Approval and Application

CE mark	Yes

Light Technical

Order Code	Full Product Name	Luminous Flux	Correlated Color Temperature (Nom)	Color rendering index (CRI)	Light source color
911401773603	BVP371 12LED 27K 220V 10 24W HE	1,570 lm	2700 K	>80	827 warm white
911401773613	BVP371 12LED 27K 220V 10 DMX 24W HE	1,440 lm	2700 K	>80	827 warm white
911401773623	BVP371 12LED 27K 220V 15 24W HE	1,635 lm	2700 K	>80	827 warm white
911401773633	BVP371 12LED 27K 220V 15 DMX 24W HE	1,500 lm	2700 K	>80	827 warm white
911401773643	BVP371 12LED 27K 220V 30 24W HE	1,855 lm	2700 K	>80	827 warm white

Order Code	Full Product Name	Luminous Flux	Correlated Color Temperature (Nom)	Color rendering index (CRI)	Light source color
911401773653	BVP371 12LED 27K 220V 30 DMX 24W HE	1,705 lm	2700 K	>80	827 warm white
911401773663	BVP371 12LED 27K 220V 45 24W HE	1,390 lm	2700 K	>80	827 warm white
911401773673	BVP371 12LED 27K 220V 45 DMX 24W HE	1,280 lm	2700 K	>80	827 warm white
911401773683	BVP371 12LED 27K 220V 60 24W HE	1,345 lm	2700 K	>80	827 warm white
911401773693	BVP371 12LED 27K 220V 60 DMX 24W HE	1,235 lm	2700 K	>80	827 warm white
911401773703	BVP371 12LED 30K 220V 10 24W HE	1,635 lm	3000 K	>80	830 warm white
911401773713	BVP371 12LED 30K 220V 10 DMX 24W HE	1,505 lm	3000 K	>80	830 warm white
911401773723	BVP371 12LED 30K 220V 15 24W HE	1,705 lm	3000 K	>80	830 warm white
911401773733	BVP371 12LED 30K 220V 15 DMX 24W HE	1,565 lm	3000 K	>80	830 warm white
911401773743	BVP371 12LED 30K 220V 30 24W HE	1,935 lm	3000 K	>80	830 warm white
911401773753	BVP371 12LED 30K 220V 30 DMX 24W HE	1,780 lm	3000 K	>80	830 warm white
911401773763	BVP371 12LED 30K 220V 45 24W HE	1,450 lm	3000 K	>80	830 warm white
911401773773	BVP371 12LED 30K 220V 45 DMX 24W HE	1,335 lm	3000 K	>80	830 warm white
911401773783	BVP371 12LED 30K 220V 60 24W HE	1,405 lm	3000 K	>80	830 warm white
911401773793	BVP371 12LED 30K 220V 60 DMX 24W HE	1,290 lm	3000 K	>80	830 warm white
911401773803	BVP371 12LED 40K 220V 10 24W HE	1,825 lm	4000 K	>80	840 neutral white
911401773813	BVP371 12LED 40K 220V 10 DMX 24W HE	1,675 lm	4000 K	>80	840 neutral white
911401773823	BVP371 12LED 40K 220V 15 24W HE	1,905 lm	4000 K	>80	840 neutral white
911401773833	BVP371 12LED 40K 220V 15 DMX 24W HE	1,750 lm	4000 K	>80	840 neutral white
911401773843	BVP371 12LED 40K 220V 30 24W HE	2,160 lm	4000 K	>80	840 neutral white
911401773853	BVP371 12LED 40K 220V 30 DMX 24W HE	1,985 lm	4000 K	>80	840 neutral white
911401773863	BVP371 12LED 40K 220V 45 24W HE	1,620 lm	4000 K	>80	840 neutral white
911401773873	BVP371 12LED 40K 220V 45 DMX 24W HE	1,485 lm	4000 K	>80	840 neutral white
911401773883	BVP371 12LED 40K 220V 60 24W HE	1,570 lm	4000 K	>80	840 neutral white
911401773893	BVP371 12LED 40K 220V 60 DMX 24W HE	1,440 lm	4000 K	>80	840 neutral white
911401773903	BVP371 12LED RGB 220V 10 DMX 24W HE	880 lm	-	N.A.	RGB
911401773913	BVP371 12LED RGB 220V 15 DMX 24W HE	920 lm	-	N.A.	RGB
911401773923	BVP371 12LED RGB 220V 30 DMX 24W HE	1,040 lm	-	N.A.	RGB
911401773933	BVP371 12LED RGB 220V 45 DMX 24W HE	780 lm	-	N.A.	RGB
911401773943	BVP371 12LED RGB 220V 60 DMX 24W HE	755 lm	-	N.A.	RGB
911401773953	BVP371 12LED RGBNW 220V 10 DMX 24W HE	1,090 lm	-	N.A.	RGBW
911401773963	BVP371 12LED RGBNW 220V 15 DMX 24W HE	1,140 lm	-	N.A.	RGBW
911401773973	BVP371 12LED RGBNW 220V 30 DMX 24W HE	1,290 lm	-	N.A.	RGBW
911401773983	BVP371 12LED RGBNW 220V 45 DMX 24W HE	970 lm	-	N.A.	RGBW
911401773993	BVP371 12LED RGBNW 220V 60 DMX 24W HE	940 lm	-	N.A.	RGBW
911401774003	BVP371 12LED RGBWW 220V 10 DMX 24W HE	1,045 lm	-	N.A.	RGBW
911401774013	BVP371 12LED RGBWW 220V 15 DMX 24W HE	1,090 lm	-	N.A.	RGBW
911401774023	BVP371 12LED RGBWW 220V 30 DMX 24W HE	1,235 lm	-	N.A.	RGBW
911401774033	BVP371 12LED RGBWW 220V 45 DMX 24W HE	925 lm	-	N.A.	RGBW
911401774043	BVP371 12LED RGBWW 220V 60 DMX 24W HE	900 lm	-	N.A.	RGBW
911401774053	BVP372 15LED RGB 220V 10 DMX 40W HP	1,295 lm	-	N.A.	RGB
911401774063	BVP372 15LED RGB 220V 15 DMX 40W HP	1,350 lm	-	N.A.	RGB

Order Code	Full Product Name	Luminous Flux	Correlated Color Temperature (Nom)	Color rendering index (CRI)	Light source color
911401774073	BVP372 15LED RGB 220V 30 DMX 40W HP	1,530 lm	-	N.A.	RGB
911401774083	BVP372 15LED RGB 220V 45 DMX 40W HP	1,150 lm	-	N.A.	RGB
911401774093	BVP372 15LED RGB 220V 60 DMX 40W HP	1,110 lm	-	N.A.	RGB
911401774103	BVP372 16LED 27K 220V 10 40W HP	2,465 lm	2700 K	>80	827 warm white
911401774113	BVP372 16LED 27K 220V 10 DMX 40W HP	2,240 lm	2700 K	>80	827 warm white
911401774123	BVP372 16LED 27K 220V 15 40W HP	2,570 lm	2700 K	>80	827 warm white
911401774133	BVP372 16LED 27K 220V 15 DMX 40W HP	2,335 lm	2700 K	>80	827 warm white
911401774143	BVP372 16LED 27K 220V 30 40W HP	2,915 lm	2700 K	>80	827 warm white
911401774153	BVP372 16LED 27K 220V 30 DMX 40W HP	2,650 lm	2700 K	>80	827 warm white
911401774163	BVP372 16LED 27K 220V 45 40W HP	2,185 lm	2700 K	>80	827 warm white
911401774173	BVP372 16LED 27K 220V 45 DMX 40W HP	1,990 lm	2700 K	>80	827 warm white
911401774183	BVP372 16LED 27K 220V 60 40W HP	2,115 lm	2700 K	>80	827 warm white
911401774193	BVP372 16LED 27K 220V 60 DMX 40W HP	1,925 lm	2700 K	>80	827 warm white
911401774203	BVP372 16LED 30K 220V 10 40W HP	2,570 lm	3000 K	>80	830 warm white
911401774213	BVP372 16LED 30K 220V 10 DMX 40W HP	2,340 lm	3000 K	>80	830 warm white
911401774223	BVP372 16LED 30K 220V 15 40W HP	2,680 lm	3000 K	>80	830 warm white
911401774233	BVP372 16LED 30K 220V 15 DMX 40W HP	2,435 lm	3000 K	>80	830 warm white
911401774243	BVP372 16LED 30K 220V 30 40W HP	3,040 lm	3000 K	>80	830 warm white
911401774253	BVP372 16LED 30K 220V 30 DMX 40W HP	2,765 lm	3000 K	>80	830 warm white
911401774263	BVP372 16LED 30K 220V 45 40W HP	2,280 lm	3000 K	>80	830 warm white
911401774273	BVP372 16LED 30K 220V 45 DMX 40W HP	2,075 lm	3000 K	>80	830 warm white
911401774283	BVP372 16LED 30K 220V 60 40W HP	2,210 lm	3000 K	>80	830 warm white
911401774293	BVP372 16LED 30K 220V 60 DMX 40W HP	2,010 lm	3000 K	>80	830 warm white
911401774303	BVP372 16LED 40K 220V 10 40W HP	2,870 lm	4000 K	>80	840 neutral white
911401774313	BVP372 16LED 40K 220V 10 DMX 40W HP	2,610 lm	4000 K	>80	840 neutral white
911401774323	BVP372 16LED 40K 220V 15 40W HP	2,990 lm	4000 K	>80	840 neutral white
911401774333	BVP372 16LED 40K 220V 15 DMX 40W HP	2,720 lm	4000 K	>80	840 neutral white
911401774343	BVP372 16LED 40K 220V 30 40W HP	3,395 lm	4000 K	>80	840 neutral white
911401774353	BVP372 16LED 40K 220V 30 DMX 40W HP	3,085 lm	4000 K	>80	840 neutral white
911401774363	BVP372 16LED 40K 220V 45 40W HP	2,545 lm	4000 K	>80	840 neutral white
911401774373	BVP372 16LED 40K 220V 45 DMX 40W HP	2,315 lm	4000 K	>80	840 neutral white
911401774383	BVP372 16LED 40K 220V 60 40W HP	2,465 lm	4000 K	>80	840 neutral white
911401774393	BVP372 16LED 40K 220V 60 DMX 40W HP	2,240 lm	4000 K	>80	840 neutral white
911401774403	BVP372 16LED RGBNW 220V 10 DMX 40W HP	1,580 lm	-	N.A.	RGBW
911401774413	BVP372 16LED RGBNW 220V 15 DMX 40W HP	1,650 lm	-	N.A.	RGBW
911401774423	BVP372 16LED RGBNW 220V 30 DMX 40W HP	1,870 lm	-	N.A.	RGBW
911401774433	BVP372 16LED RGBNW 220V 45 DMX 40W HP	1,400 lm	-	N.A.	RGBW
911401774443	BVP372 16LED RGBNW 220V 60 DMX 40W HP	1,360 lm	-	N.A.	RGBW
911401774453	BVP372 16LED RGBWW 220V 10 DMX 40W HP	1,515 lm	-	N.A.	RGBW
911401774463	BVP372 16LED RGBWW 220V 15 DMX 40W HP	1,575 lm	-	N.A.	RGBW
911401774473	BVP372 16LED RGBWW 220V 30 DMX 40W HP	1,790 lm	-	N.A.	RGBW
911401774483	BVP372 16LED RGBWW 220V 45 DMX 40W HP	1,340 lm	-	N.A.	RGBW

Order Code	Full Product Name	Luminous Flux	Correlated Color Temperature (Nom)	Color rendering index (CRI)	Light source color
911401774493	BVP372 16LED RGBWW 220V 60 DMX 40W HP	1,300 lm	-	N.A.	RGBW
911401774503	BVP372 18LED 27K 220V 10 50W HP	2,945 lm	2700 K	>80	827 warm white
911401774513	BVP372 18LED 27K 220V 10 DMX 50W HP	2,745 lm	2700 K	>80	827 warm white
911401774523	BVP372 18LED 27K 220V 15 50W HP	3,070 lm	2700 K	>80	827 warm white
911401774533	BVP372 18LED 27K 220V 15 DMX 50W HP	2,860 lm	2700 K	>80	827 warm white
911401774543	BVP372 18LED 27K 220V 30 50W HP	3,485 lm	2700 K	>80	827 warm white
911401774553	BVP372 18LED 27K 220V 30 DMX 50W HP	3,250 lm	2700 K	>80	827 warm white
911401774563	BVP372 18LED 27K 220V 45 50W HP	2,615 lm	2700 K	>80	827 warm white
911401774573	BVP372 18LED 27K 220V 45 DMX 50W HP	2,435 lm	2700 K	>80	827 warm white
911401774583	BVP372 18LED 27K 220V 60 50W HP	2,530 lm	2700 K	>80	827 warm white
911401774593	BVP372 18LED 27K 220V 60 DMX 50W HP	2,360 lm	2700 K	>80	827 warm white
911401774603	BVP372 18LED 30K 220V 10 50W HP	3,070 lm	3000 K	>80	830 warm white
911401774613	BVP372 18LED 30K 220V 10 DMX 50W HP	2,865 lm	3000 K	>80	830 warm white
911401774623	BVP372 18LED 30K 220V 15 50W HP	3,200 lm	3000 K	>80	830 warm white
911401774633	BVP372 18LED 30K 220V 15 DMX 50W HP	2,985 lm	3000 K	>80	830 warm white
911401774643	BVP372 18LED 30K 220V 30 50W HP	3,635 lm	3000 K	>80	830 warm white
911401774653	BVP372 18LED 30K 220V 30 DMX 50W HP	3,390 lm	3000 K	>80	830 warm white
911401774663	BVP372 18LED 30K 220V 45 50W HP	2,725 lm	3000 K	>80	830 warm white
911401774673	BVP372 18LED 30K 220V 45 DMX 50W HP	2,540 lm	3000 K	>80	830 warm white
911401774683	BVP372 18LED 30K 220V 60 50W HP	2,640 lm	3000 K	>80	830 warm white
911401774693	BVP372 18LED 30K 220V 60 DMX 50W HP	2,460 lm	3000 K	>80	830 warm white
911401774703	BVP372 18LED 40K 220V 10 50W HP	3,430 lm	4000 K	>80	840 neutral white
911401774713	BVP372 18LED 40K 220V 10 DMX 50W HP	3,195 lm	4000 K	>80	840 neutral white
911401774723	BVP372 18LED 40K 220V 15 50W HP	3,575 lm	4000 K	>80	840 neutral white
911401774733	BVP372 18LED 40K 220V 15 DMX 50W HP	3,330 lm	4000 K	>80	840 neutral white
911401774743	BVP372 18LED 40K 220V 30 50W HP	4,055 lm	4000 K	>80	840 neutral white
911401774753	BVP372 18LED 40K 220V 30 DMX 50W HP	3,780 lm	4000 K	>80	840 neutral white
911401774763	BVP372 18LED 40K 220V 45 50W HP	3,040 lm	4000 K	>80	840 neutral white
911401774773	BVP372 18LED 40K 220V 45 DMX 50W HP	2,835 lm	4000 K	>80	840 neutral white
911401774783	BVP372 18LED 40K 220V 60 50W HP	2,945 lm	4000 K	>80	840 neutral white
911401774793	BVP372 18LED 40K 220V 60 DMX 50W HP	2,745 lm	4000 K	>80	840 neutral white
911401774803	BVP372 18LED RGB 220V 10 DMX 50W HP	1,570 lm	-	N.A.	RGB
911401774813	BVP372 18LED RGB 220V 15 DMX 50W HP	1,635 lm	-	N.A.	RGB
911401774823	BVP372 18LED RGB 220V 30 DMX 50W HP	1,855 lm	-	N.A.	RGB
911401774833	BVP372 18LED RGB 220V 45 DMX 50W HP	1,390 lm	-	N.A.	RGB
911401774843	BVP372 18LED RGB 220V 60 DMX 50W HP	1,345 lm	-	N.A.	RGB
911401774853	BVP372 20LED RGBNW 220V 10 DMX 50W HP	2,140 lm	-	N.A.	RGBW
911401774863	BVP372 20LED RGBNW 220V 15 DMX 50W HP	2,230 lm	-	N.A.	RGBW
911401774873	BVP372 20LED RGBNW 220V 30 DMX 50W HP	2,530 lm	-	N.A.	RGBW
911401774883	BVP372 20LED RGBNW 220V 45 DMX 50W HP	1,895 lm	-	N.A.	RGBW
911401774893	BVP372 20LED RGBNW 220V 60 DMX 50W HP	1,835 lm	-	N.A.	RGBW
911401774903	BVP372 20LED RGBWW 220V 10 DMX 50W HP	2,045 lm	-	N.A.	RGBW

Order Code	Full Product Name	Luminous Flux	Correlated Color Temperature (Nom)	Color rendering index (CRI)	Light source color
911401774913	BVP372 20LED RGBWW 220V 15 DMX 50W HP	2,130 lm	-	N.A.	RGBW
911401774923	BVP372 20LED RGBWW 220V 30 DMX 50W HP	2,420 lm	-	N.A.	RGBW
911401774933	BVP372 20LED RGBWW 220V 45 DMX 50W HP	1,815 lm	-	N.A.	RGBW
911401774943	BVP372 20LED RGBWW 220V 60 DMX 50W HP	1,755 lm	-	N.A.	RGBW
911401774953	BVP373 30LED 27K 220V 10 80W HP	4,945 lm	2700 K	>80	827 warm white
911401774963	BVP373 30LED 27K 220V 10 DMX 80W HP	4,640 lm	2700 K	>80	827 warm white
911401774973	BVP373 30LED 27K 220V 15 80W HP	5,155 lm	2700 K	>80	827 warm white
911401774983	BVP373 30LED 27K 220V 15 DMX 80W HP	4,835 lm	2700 K	>80	827 warm white
911401774993	BVP373 30LED 27K 220V 30 80W HP	5,850 lm	2700 K	>80	827 warm white
911401775003	BVP373 30LED 27K 220V 30 DMX 80W HP	5,490 lm	2700 K	>80	827 warm white
911401775013	BVP373 30LED 27K 220V 45 80W HP	4,385 lm	2700 K	>80	827 warm white
911401775023	BVP373 30LED 27K 220V 45 DMX 80W HP	4,115 lm	2700 K	>80	827 warm white
911401775033	BVP373 30LED 27K 220V 60 80W HP	4,250 lm	2700 K	>80	827 warm white
911401775043	BVP373 30LED 27K 220V 60 DMX 80W HP	3,985 lm	2700 K	>80	827 warm white
911401775053	BVP373 30LED 30K 220V 10 80W HP	5,160 lm	3000 K	>80	830 warm white
911401775063	BVP373 30LED 30K 220V 10 DMX 80W HP	4,840 lm	3000 K	>80	830 warm white
911401775073	BVP373 30LED 30K 220V 15 80W HP	5,375 lm	3000 K	>80	830 warm white
911401775083	BVP373 30LED 30K 220V 15 DMX 80W HP	5,045 lm	3000 K	>80	830 warm white
911401775093	BVP373 30LED 30K 220V 30 80W HP	6,100 lm	3000 K	>80	830 warm white
911401775103	BVP373 30LED 30K 220V 30 DMX 80W HP	5,725 lm	3000 K	>80	830 warm white
911401775113	BVP373 30LED 30K 220V 45 80W HP	4,575 lm	3000 K	>80	830 warm white
911401775123	BVP373 30LED 30K 220V 45 DMX 80W HP	4,295 lm	3000 K	>80	830 warm white
911401775133	BVP373 30LED 30K 220V 60 80W HP	4,430 lm	3000 K	>80	830 warm white
911401775143	BVP373 30LED 30K 220V 60 DMX 80W HP	4,155 lm	3000 K	>80	830 warm white
911401775153	BVP373 30LED 40K 220V 10 80W HP	5,755 lm	4000 K	>80	840 neutral white
911401775163	BVP373 30LED 40K 220V 10 DMX 80W HP	5,400 lm	4000 K	>80	840 neutral white
911401775173	BVP373 30LED 40K 220V 15 80W HP	6,000 lm	4000 K	>80	840 neutral white
911401775183	BVP373 30LED 40K 220V 15 DMX 80W HP	5,625 lm	4000 K	>80	840 neutral white
911401775193	BVP373 30LED 40K 220V 30 80W HP	6,810 lm	4000 K	>80	840 neutral white
911401775203	BVP373 30LED 40K 220V 30 DMX 80W HP	6,385 lm	4000 K	>80	840 neutral white
911401775213	BVP373 30LED 40K 220V 45 80W HP	5,105 lm	4000 K	>80	840 neutral white
911401775223	BVP373 30LED 40K 220V 45 DMX 80W HP	4,790 lm	4000 K	>80	840 neutral white
911401775233	BVP373 30LED 40K 220V 60 80W HP	4,945 lm	4000 K	>80	840 neutral white
911401775243	BVP373 30LED 40K 220V 60 DMX 80W HP	4,640 lm	4000 K	>80	840 neutral white
911401775253	BVP373 30LED RGB 220V 10 DMX 80W HP	2,695 lm	-	N.A.	RGB
911401775263	BVP373 30LED RGB 220V 15 DMX 80W HP	2,810 lm	-	N.A.	RGB
911401775273	BVP373 30LED RGB 220V 30 DMX 80W HP	3,190 lm	-	N.A.	RGB
911401775283	BVP373 30LED RGB 220V 45 DMX 80W HP	2,390 lm	-	N.A.	RGB
911401775293	BVP373 30LED RGB 220V 60 DMX 80W HP	2,315 lm	-	N.A.	RGB
911401775303	BVP373 32LED RGBNW 220V 10 DMX 80W HP	3,520 lm	-	N.A.	RGBW
911401775313	BVP373 32LED RGBNW 220V 15 DMX 80W HP	3,670 lm	-	N.A.	RGBW
911401775323	BVP373 32LED RGBNW 220V 30 DMX 80W HP	4,170 lm	-	N.A.	RGBW

Order Code	Full Product Name	Luminous Flux	Correlated Color Temperature (Nom)	Color rendering index (CRI)	Light source color
911401775333	BVP373 32LED RGBNW 220V 45 DMX 80W HP	3,125 lm	-	N.A.	RGBW
911401775343	BVP373 32LED RGBNW 220V 60 DMX 80W HP	3,025 lm	-	N.A.	RGBW
911401775353	BVP373 32LED RGBWW 220V 10 DMX 80W HP	3,370 lm	-	N.A.	RGBW
911401775363	BVP373 32LED RGBWW 220V 15 DMX 80W HP	3,515 lm	-	N.A.	RGBW
911401775373	BVP373 32LED RGBWW 220V 30 DMX 80W HP	3,990 lm	-	N.A.	RGBW
911401775383	BVP373 32LED RGBWW 220V 45 DMX 80W HP	2,990 lm	-	N.A.	RGBW
911401775393	BVP373 32LED RGBWW 220V 60 DMX 80W HP	2,895 lm	-	N.A.	RGBW
911401775403	BVP373 36LED 27K 220V 10 100W HP	6,175 lm	2700 K	>80	827 warm white
911401775413	BVP373 36LED 27K 220V 10 DMX 100W HP	5,720 lm	2700 K	>80	827 warm white
911401775423	BVP373 36LED 27K 220V 15 100W HP	6,440 lm	2700 K	>80	827 warm white
911401775433	BVP373 36LED 27K 220V 15 DMX 100W HP	5,965 lm	2700 K	>80	827 warm white
911401775443	BVP373 36LED 27K 220V 30 100W HP	7,310 lm	2700 K	>80	827 warm white
911401775453	BVP373 36LED 27K 220V 30 DMX 100W HP	6,770 lm	2700 K	>80	827 warm white
911401775463	BVP373 36LED 27K 220V 45 100W HP	5,480 lm	2700 K	>80	827 warm white
911401775473	BVP373 36LED 27K 220V 45 DMX 100W HP	5,075 lm	2700 K	>80	827 warm white
911401775483	BVP373 36LED 27K 220V 60 100W HP	5,305 lm	2700 K	>80	827 warm white
911401775493	BVP373 36LED 27K 220V 60 DMX 100W HP	4,915 lm	2700 K	>80	827 warm white
911401775503	BVP373 36LED 30K 220V 10 100W HP	6,445 lm	3000 K	>80	830 warm white
911401775513	BVP373 36LED 30K 220V 10 DMX 100W HP	5,970 lm	3000 K	>80	830 warm white
911401775523	BVP373 36LED 30K 220V 15 100W HP	6,715 lm	3000 K	>80	830 warm white
911401775533	BVP373 36LED 30K 220V 15 DMX 100W HP	6,220 lm	3000 K	>80	830 warm white
911401775543	BVP373 36LED 30K 220V 30 100W HP	7,625 lm	3000 K	>80	830 warm white
911401775553	BVP373 36LED 30K 220V 30 DMX 100W HP	7,060 lm	3000 K	>80	830 warm white
911401775563	BVP373 36LED 30K 220V 45 100W HP	5,715 lm	3000 K	>80	830 warm white
911401775573	BVP373 36LED 30K 220V 45 DMX 100W HP	5,295 lm	3000 K	>80	830 warm white
911401775583	BVP373 36LED 30K 220V 60 100W HP	5,535 lm	3000 K	>80	830 warm white
911401775593	BVP373 36LED 30K 220V 60 DMX 100W HP	5,125 lm	3000 K	>80	830 warm white
911401775603	BVP373 36LED 40K 220V 10 100W HP	7,190 lm	4000 K	>80	840 neutral white
911401775613	BVP373 36LED 40K 220V 10 DMX 100W HP	6,660 lm	4000 K	>80	840 neutral white
911401775623	BVP373 36LED 40K 220V 15 100W HP	7,495 lm	4000 K	>80	840 neutral white
911401775633	BVP373 36LED 40K 220V 15 DMX 100W HP	6,940 lm	4000 K	>80	840 neutral white
911401775643	BVP373 36LED 40K 220V 30 100W HP	8,505 lm	4000 K	>80	840 neutral white
911401775653	BVP373 36LED 40K 220V 30 DMX 100W HP	7,880 lm	4000 K	>80	840 neutral white
911401775663	BVP373 36LED 40K 220V 45 100W HP	6,380 lm	4000 K	>80	840 neutral white
911401775673	BVP373 36LED 40K 220V 45 DMX 100W HP	5,910 lm	4000 K	>80	840 neutral white
911401775683	BVP373 36LED 40K 220V 60 100W HP	6,175 lm	4000 K	>80	840 neutral white
911401775693	BVP373 36LED 40K 220V 60 DMX 100W HP	5,720 lm	4000 K	>80	840 neutral white
911401775703	BVP373 36LED RGB 220V 10 DMX 100W HP	3,300 lm	-	N.A.	RGB
911401775713	BVP373 36LED RGB 220V 15 DMX 100W HP	3,440 lm	-	N.A.	RGB
911401775723	BVP373 36LED RGB 220V 30 DMX 100W HP	3,905 lm	-	N.A.	RGB
911401775733	BVP373 36LED RGB 220V 45 DMX 100W HP	2,930 lm	-	N.A.	RGB
911401775743	BVP373 36LED RGB 220V 60 DMX 100W HP	2,835 lm	-	N.A.	RGB

Order Code	Full Product Name	Luminous Flux	Correlated Color Temperature (Nom)	Color rendering index (CRI)	Light source color
911401775753	BVP373 36LED RGBNW 220V 10 DMX 100W HP	4,175 lm	-	N.A.	RGBW
911401775763	BVP373 36LED RGBNW 220V 15 DMX 100W HP	4,355 lm	-	N.A.	RGBW
911401775773	BVP373 36LED RGBNW 220V 30 DMX 100W HP	4,945 lm	-	N.A.	RGBW
911401775783	BVP373 36LED RGBNW 220V 45 DMX 100W HP	3,705 lm	-	N.A.	RGBW
911401775793	BVP373 36LED RGBNW 220V 60 DMX 100W HP	3,590 lm	-	N.A.	RGBW
911401775803	BVP373 36LED RGBWW 220V 10 DMX 100W HP	3,995 lm	-	N.A.	RGBW
911401775813	BVP373 36LED RGBWW 220V 15 DMX 100W HP	4,165 lm	-	N.A.	RGBW
911401775823	BVP373 36LED RGBWW 220V 30 DMX 100W HP	4,730 lm	-	N.A.	RGBW
911401775833	BVP373 36LED RGBWW 220V 45 DMX 100W HP	3,545 lm	-	N.A.	RGBW
911401775843	BVP373 36LED RGBWW 220V 60 DMX 100W HP	3,435 lm	-	N.A.	RGBW
911401775853	BVP374 48LED 27K 220V 10 120W HP	7,540 lm	2700 K	>80	827 warm white
911401775863	BVP374 48LED 27K 220V 10 DMX 120W HP	7,040 lm	2700 K	>80	827 warm white
911401775873	BVP374 48LED 27K 220V 15 120W HP	7,855 lm	2700 K	>80	827 warm white
911401775883	BVP374 48LED 27K 220V 15 DMX 120W HP	7,340 lm	2700 K	>80	827 warm white
911401775893	BVP374 48LED 27K 220V 30 120W HP	8,920 lm	2700 K	>80	827 warm white
911401775903	BVP374 48LED 27K 220V 30 DMX 120W HP	8,330 lm	2700 K	>80	827 warm white
911401775913	BVP374 48LED 27K 220V 45 120W HP	6,690 lm	2700 K	>80	827 warm white
911401775923	BVP374 48LED 27K 220V 45 DMX 120W HP	6,245 lm	2700 K	>80	827 warm white
911401775933	BVP374 48LED 27K 220V 60 120W HP	6,475 lm	2700 K	>80	827 warm white
911401775943	BVP374 48LED 27K 220V 60 DMX 120W HP	6,050 lm	2700 K	>80	827 warm white
911401775953	BVP374 48LED 30K 220V 10 120W HP	7,865 lm	3000 K	>80	830 warm white
911401775963	BVP374 48LED 30K 220V 10 DMX 120W HP	7,345 lm	3000 K	>80	830 warm white
911401775973	BVP374 48LED 30K 220V 15 120W HP	8,195 lm	3000 K	>80	830 warm white
911401775983	BVP374 48LED 30K 220V 15 DMX 120W HP	7,655 lm	3000 K	>80	830 warm white
911401775993	BVP374 48LED 30K 220V 30 120W HP	9,305 lm	3000 K	>80	830 warm white
911401776003	BVP374 48LED 30K 220V 30 DMX 120W HP	8,690 lm	3000 K	>80	830 warm white
911401776013	BVP374 48LED 30K 220V 45 120W HP	6,975 lm	3000 K	>80	830 warm white
911401776023	BVP374 48LED 30K 220V 45 DMX 120W HP	6,515 lm	3000 K	>80	830 warm white
911401776033	BVP374 48LED 30K 220V 60 120W HP	6,755 lm	3000 K	>80	830 warm white
911401776043	BVP374 48LED 30K 220V 60 DMX 120W HP	6,310 lm	3000 K	>80	830 warm white
911401776053	BVP374 48LED 40K 220V 10 120W HP	8,775 lm	4000 K	>80	840 neutral white
911401776063	BVP374 48LED 40K 220V 10 DMX 120W HP	8,195 lm	4000 K	>80	840 neutral white
911401776073	BVP374 48LED 40K 220V 15 120W HP	9,145 lm	4000 K	>80	840 neutral white
911401776083	BVP374 48LED 40K 220V 15 DMX 120W HP	8,540 lm	4000 K	>80	840 neutral white
911401776093	BVP374 48LED 40K 220V 30 120W HP	10,380 lm	4000 K	>80	840 neutral white
911401776103	BVP374 48LED 40K 220V 30 DMX 120W HP	9,695 lm	4000 K	>80	840 neutral white

Order Code	Full Product Name	Luminous Flux	Correlated Color Temperature (Nom)	Color rendering index (CRI)	Light source color
911401776113	BVP374 48LED 40K 220V 45 120W HP	7,785 lm	4000 K	>80	840 neutral white
911401776123	BVP374 48LED 40K 220V 45 DMX 120W HP	7,270 lm	4000 K	>80	840 neutral white
911401776133	BVP374 48LED 40K 220V 60 120W HP	7,535 lm	4000 K	>80	840 neutral white
911401776143	BVP374 48LED 40K 220V 60 DMX 120W HP	7,040 lm	4000 K	>80	840 neutral white
911401776153	BVP374 48LED RGB 220V 10 DMX 120W HP	4,035 lm	-	N.A.	RGB
911401776163	BVP374 48LED RGB 220V 15 DMX 120W HP	4,205 lm	-	N.A.	RGB
911401776173	BVP374 48LED RGB 220V 30 DMX 120W HP	4,775 lm	-	N.A.	RGB
911401776183	BVP374 48LED RGB 220V 45 DMX 120W HP	3,580 lm	-	N.A.	RGB
911401776193	BVP374 48LED RGB 220V 60 DMX 120W HP	3,465 lm	-	N.A.	RGB
911401776203	BVP374 48LED RGBNW 220V 10 DMX 120W HP	5,165 lm	-	N.A.	RGBW
911401776213	BVP374 48LED RGBNW 220V 15 DMX 120W HP	5,380 lm	-	N.A.	RGBW
911401776223	BVP374 48LED RGBNW 220V 30 DMX 120W HP	6,110 lm	-	N.A.	RGBW
911401776233	BVP374 48LED RGBNW 220V 45 DMX 120W HP	4,580 lm	-	N.A.	RGBW
911401776243	BVP374 48LED RGBNW 220V 60 DMX 120W HP	4,435 lm	-	N.A.	RGBW
911401776253	BVP374 48LED RGBWW 220V 10 DMX 120W HP	4,940 lm	-	N.A.	RGBW
911401776263	BVP374 48LED RGBWW 220V 15 DMX 120W HP	5,150 lm	-	N.A.	RGBW
911401776273	BVP374 48LED RGBWW 220V 30 DMX 120W HP	5,845 lm	-	N.A.	RGBW
911401776283	BVP374 48LED RGBWW 220V 45 DMX 120W HP	4,385 lm	-	N.A.	RGBW
911401776293	BVP374 48LED RGBWW 220V 60 DMX 120W HP	4,245 lm	-	N.A.	RGBW
911401776303	BVP374 60LED 27K 220V 10 150W HP	9,425 lm	2700 K	>80	827 warm white
911401776313	BVP374 60LED 27K 220V 10 DMX 150W HP	9,065 lm	2700 K	>80	827 warm white
911401776323	BVP374 60LED 27K 220V 15 150W HP	9,820 lm	2700 K	>80	827 warm white
911401776333	BVP374 60LED 27K 220V 15 DMX 150W HP	9,450 lm	2700 K	>80	827 warm white
911401776343	BVP374 60LED 27K 220V 30 150W HP	11,150 lm	2700 K	>80	827 warm white
911401776353	BVP374 60LED 27K 220V 30 DMX 150W HP	10,725 lm	2700 K	>80	827 warm white
911401776363	BVP374 60LED 27K 220V 45 150W HP	8,360 lm	2700 K	>80	827 warm white
911401776373	BVP374 60LED 27K 220V 45 DMX 150W HP	8,045 lm	2700 K	>80	827 warm white
911401776383	BVP374 60LED 27K 220V 60 150W HP	8,095 lm	2700 K	>80	827 warm white
911401776393	BVP374 60LED 27K 220V 60 DMX 150W HP	7,790 lm	2700 K	>80	827 warm white
911401776403	BVP374 60LED 30K 220V 10 150W HP	9,830 lm	3000 K	>80	830 warm white
911401776413	BVP374 60LED 30K 220V 10 DMX 150W HP	9,455 lm	3000 K	>80	830 warm white
911401776423	BVP374 60LED 30K 220V 15 150W HP	10,245 lm	3000 K	>80	830 warm white
911401776433	BVP374 60LED 30K 220V 15 DMX 150W HP	9,855 lm	3000 K	>80	830 warm white
911401776443	BVP374 60LED 30K 220V 30 150W HP	11,630 lm	3000 K	>80	830 warm white
911401776453	BVP374 60LED 30K 220V 30 DMX 150W HP	11,190 lm	3000 K	>80	830 warm white
911401776463	BVP374 60LED 30K 220V 45 150W HP	8,720 lm	3000 K	>80	830 warm white

Order Code	Full Product Name	Luminous Flux	Correlated Color Temperature (Nom)	Color rendering index (CRI)	Light source color
911401776473	BVP374 60LED 30K 220V 45 DMX 150W HP	8,390 lm	3000 K	>80	830 warm white
911401776483	BVP374 60LED 30K 220V 60 150W HP	8,445 lm	3000 K	>80	830 warm white
911401776493	BVP374 60LED 30K 220V 60 DMX 150W HP	8,125 lm	3000 K	>80	830 warm white
911401776503	BVP374 60LED 40K 220V 10 150W HP	10,965 lm	4000 K	>80	840 neutral white
911401776513	BVP374 60LED 40K 220V 10 DMX 150W HP	10,550 lm	4000 K	>80	840 neutral white
911401776523	BVP374 60LED 40K 220V 15 150W HP	11,430 lm	4000 K	>80	840 neutral white
911401776533	BVP374 60LED 40K 220V 15 DMX 150W HP	10,995 lm	4000 K	>80	840 neutral white
911401776543	BVP374 60LED 40K 220V 30 150W HP	12,975 lm	4000 K	>80	840 neutral white
911401776553	BVP374 60LED 40K 220V 30 DMX 150W HP	12,485 lm	4000 K	>80	840 neutral white
911401776563	BVP374 60LED 40K 220V 45 150W HP	9,730 lm	4000 K	>80	840 neutral white
911401776573	BVP374 60LED 40K 220V 45 DMX 150W HP	9,360 lm	4000 K	>80	840 neutral white
911401776583	BVP374 60LED 40K 220V 60 150W HP	9,420 lm	4000 K	>80	840 neutral white
911401776593	BVP374 60LED 40K 220V 60 DMX 150W HP	9,065 lm	4000 K	>80	840 neutral white
911401776603	BVP374 60LED RGB 220V 10 DMX 150W HP	5,185 lm	-	N.A.	RGB
911401776613	BVP374 60LED RGB 220V 15 DMX 150W HP	5,405 lm	-	N.A.	RGB
911401776623	BVP374 60LED RGB 220V 30 DMX 150W HP	6,135 lm	-	N.A.	RGB
911401776633	BVP374 60LED RGB 220V 45 DMX 150W HP	4,600 lm	-	N.A.	RGB
911401776643	BVP374 60LED RGB 220V 60 DMX 150W HP	4,455 lm	-	N.A.	RGB
911401776653	BVP374 60LED RGBNW 220V 10 DMX 150W HP	6,635 lm	-	N.A.	RGBW
911401776663	BVP374 60LED RGBNW 220V 15 DMX 150W HP	6,920 lm	-	N.A.	RGBW
911401776673	BVP374 60LED RGBNW 220V 30 DMX 150W HP	7,855 lm	-	N.A.	RGBW
911401776683	BVP374 60LED RGBNW 220V 45 DMX 150W HP	5,890 lm	-	N.A.	RGBW
911401776693	BVP374 60LED RGBNW 220V 60 DMX 150W HP	5,700 lm	-	N.A.	RGBW
911401776703	BVP374 60LED RGBWW 220V 10 DMX 150W HP	6,370 lm	-	N.A.	RGBW
911401776713	BVP374 60LED RGBWW 220V 15 DMX 150W HP	6,640 lm	-	N.A.	RGBW
911401776723	BVP374 60LED RGBWW 220V 30 DMX 150W HP	7,535 lm	-	N.A.	RGBW
911401776733	BVP374 60LED RGBWW 220V 45 DMX 150W HP	5,650 lm	-	N.A.	RGBW
911401776743	BVP374 60LED RGBWW 220V 60 DMX 150W HP	5,470 lm	-	N.A.	RGBW

Operating and Electrical

Order Code	Full Product Name	Power Consumption
911401773603	BVP371 12LED 27K 220V 10 24W HE	24 W
911401773613	BVP371 12LED 27K 220V 10 DMX 24W HE	24 W
911401773623	BVP371 12LED 27K 220V 15 24W HE	24 W

Order Code	Full Product Name	Power Consumption
911401773633	BVP371 12LED 27K 220V 15 DMX 24W HE	24 W
911401773643	BVP371 12LED 27K 220V 30 24W HE	24 W
911401773653	BVP371 12LED 27K 220V 30 DMX 24W HE	24 W
911401773663	BVP371 12LED 27K 220V 45 24W HE	24 W
911401773673	BVP371 12LED 27K 220V 45 DMX 24W HE	24 W
911401773683	BVP371 12LED 27K 220V 60 24W HE	24 W
911401773693	BVP371 12LED 27K 220V 60 DMX 24W HE	24 W
911401773703	BVP371 12LED 30K 220V 10 24W HE	24 W
911401773713	BVP371 12LED 30K 220V 10 DMX 24W HE	24 W
911401773723	BVP371 12LED 30K 220V 15 24W HE	24 W
911401773733	BVP371 12LED 30K 220V 15 DMX 24W HE	24 W
911401773743	BVP371 12LED 30K 220V 30 24W HE	24 W
911401773753	BVP371 12LED 30K 220V 30 DMX 24W HE	24 W
911401773763	BVP371 12LED 30K 220V 45 24W HE	24 W
911401773773	BVP371 12LED 30K 220V 45 DMX 24W HE	24 W
911401773783	BVP371 12LED 30K 220V 60 24W HE	24 W
911401773793	BVP371 12LED 30K 220V 60 DMX 24W HE	24 W
911401773803	BVP371 12LED 40K 220V 10 24W HE	24 W
911401773813	BVP371 12LED 40K 220V 10 DMX 24W HE	24 W
911401773823	BVP371 12LED 40K 220V 15 24W HE	24 W
911401773833	BVP371 12LED 40K 220V 15 DMX 24W HE	24 W
911401773843	BVP371 12LED 40K 220V 30 24W HE	24 W
911401773853	BVP371 12LED 40K 220V 30 DMX 24W HE	24 W
911401773863	BVP371 12LED 40K 220V 45 24W HE	24 W
911401773873	BVP371 12LED 40K 220V 45 DMX 24W HE	24 W
911401773883	BVP371 12LED 40K 220V 60 24W HE	24 W
911401773893	BVP371 12LED 40K 220V 60 DMX 24W HE	24 W
911401773903	BVP371 12LED RGB 220V 10 DMX 24W HE	24 W
911401773913	BVP371 12LED RGB 220V 15 DMX 24W HE	24 W
911401773923	BVP371 12LED RGB 220V 30 DMX 24W HE	24 W
911401773933	BVP371 12LED RGB 220V 45 DMX 24W HE	24 W
911401773943	BVP371 12LED RGB 220V 60 DMX 24W HE	24 W
911401773953	BVP371 12LED RGBNW 220V 10 DMX 24W HE	24 W
911401773963	BVP371 12LED RGBNW 220V 15 DMX 24W HE	24 W
911401773973	BVP371 12LED RGBNW 220V 30 DMX 24W HE	24 W
911401773983	BVP371 12LED RGBNW 220V 45 DMX 24W HE	24 W
911401773993	BVP371 12LED RGBNW 220V 60 DMX 24W HE	24 W
911401774003	BVP371 12LED RGBWW 220V 10 DMX 24W HE	24 W
911401774013	BVP371 12LED RGBWW 220V 15 DMX 24W HE	24 W
911401774023	BVP371 12LED RGBWW 220V 30 DMX 24W HE	24 W
911401774033	BVP371 12LED RGBWW 220V 45 DMX 24W HE	24 W
911401774043	BVP371 12LED RGBWW 220V 60 DMX 24W HE	24 W

Order Code	Full Product Name	Power Consumption
911401774053	BVP372 15LED RGB 220V 10 DMX 40W HP	40 W
911401774063	BVP372 15LED RGB 220V 15 DMX 40W HP	40 W
911401774073	BVP372 15LED RGB 220V 30 DMX 40W HP	40 W
911401774083	BVP372 15LED RGB 220V 45 DMX 40W HP	40 W
911401774093	BVP372 15LED RGB 220V 60 DMX 40W HP	40 W
911401774103	BVP372 16LED 27K 220V 10 40W HP	40 W
911401774113	BVP372 16LED 27K 220V 10 DMX 40W HP	40 W
911401774123	BVP372 16LED 27K 220V 15 40W HP	40 W
911401774133	BVP372 16LED 27K 220V 15 DMX 40W HP	40 W
911401774143	BVP372 16LED 27K 220V 30 40W HP	40 W
911401774153	BVP372 16LED 27K 220V 30 DMX 40W HP	40 W
911401774163	BVP372 16LED 27K 220V 45 40W HP	40 W
911401774173	BVP372 16LED 27K 220V 45 DMX 40W HP	40 W
911401774183	BVP372 16LED 27K 220V 60 40W HP	40 W
911401774193	BVP372 16LED 27K 220V 60 DMX 40W HP	40 W
911401774203	BVP372 16LED 30K 220V 10 40W HP	40 W
911401774213	BVP372 16LED 30K 220V 10 DMX 40W HP	40 W
911401774223	BVP372 16LED 30K 220V 15 40W HP	40 W
911401774233	BVP372 16LED 30K 220V 15 DMX 40W HP	40 W
911401774243	BVP372 16LED 30K 220V 30 40W HP	40 W
911401774253	BVP372 16LED 30K 220V 30 DMX 40W HP	40 W
911401774263	BVP372 16LED 30K 220V 45 40W HP	40 W
911401774273	BVP372 16LED 30K 220V 45 DMX 40W HP	40 W
911401774283	BVP372 16LED 30K 220V 60 40W HP	40 W
911401774293	BVP372 16LED 30K 220V 60 DMX 40W HP	40 W
911401774303	BVP372 16LED 40K 220V 10 40W HP	40 W
911401774313	BVP372 16LED 40K 220V 10 DMX 40W HP	40 W
911401774323	BVP372 16LED 40K 220V 15 40W HP	40 W
911401774333	BVP372 16LED 40K 220V 15 DMX 40W HP	40 W
911401774343	BVP372 16LED 40K 220V 30 40W HP	40 W
911401774353	BVP372 16LED 40K 220V 30 DMX 40W HP	40 W
911401774363	BVP372 16LED 40K 220V 45 40W HP	40 W
911401774373	BVP372 16LED 40K 220V 45 DMX 40W HP	40 W
911401774383	BVP372 16LED 40K 220V 60 40W HP	40 W
911401774393	BVP372 16LED 40K 220V 60 DMX 40W HP	40 W
911401774403	BVP372 16LED RGBNW 220V 10 DMX 40W HP	40 W
911401774413	BVP372 16LED RGBNW 220V 15 DMX 40W HP	40 W
911401774423	BVP372 16LED RGBNW 220V 30 DMX 40W HP	40 W
911401774433	BVP372 16LED RGBNW 220V 45 DMX 40W HP	40 W
911401774443	BVP372 16LED RGBNW 220V 60 DMX 40W HP	40 W
911401774453	BVP372 16LED RGBWW 220V 10 DMX 40W HP	40 W
911401774463	BVP372 16LED RGBWW 220V 15 DMX 40W HP	40 W

Order Code	Full Product Name	Power Consumption
911401774473	BVP372 16LED RGBWW 220V 30 DMX 40W HP	40 W
911401774483	BVP372 16LED RGBWW 220V 45 DMX 40W HP	40 W
911401774493	BVP372 16LED RGBWW 220V 60 DMX 40W HP	40 W
911401774503	BVP372 18LED 27K 220V 10 50W HP	50 W
911401774513	BVP372 18LED 27K 220V 10 DMX 50W HP	50 W
911401774523	BVP372 18LED 27K 220V 15 50W HP	50 W
911401774533	BVP372 18LED 27K 220V 15 DMX 50W HP	50 W
911401774543	BVP372 18LED 27K 220V 30 50W HP	50 W
911401774553	BVP372 18LED 27K 220V 30 DMX 50W HP	50 W
911401774563	BVP372 18LED 27K 220V 45 50W HP	50 W
911401774573	BVP372 18LED 27K 220V 45 DMX 50W HP	50 W
911401774583	BVP372 18LED 27K 220V 60 50W HP	50 W
911401774593	BVP372 18LED 27K 220V 60 DMX 50W HP	50 W
911401774603	BVP372 18LED 30K 220V 10 50W HP	50 W
911401774613	BVP372 18LED 30K 220V 10 DMX 50W HP	50 W
911401774623	BVP372 18LED 30K 220V 15 50W HP	50 W
911401774633	BVP372 18LED 30K 220V 15 DMX 50W HP	50 W
911401774643	BVP372 18LED 30K 220V 30 50W HP	50 W
911401774653	BVP372 18LED 30K 220V 30 DMX 50W HP	50 W
911401774663	BVP372 18LED 30K 220V 45 50W HP	50 W
911401774673	BVP372 18LED 30K 220V 45 DMX 50W HP	50 W
911401774683	BVP372 18LED 30K 220V 60 50W HP	50 W
911401774693	BVP372 18LED 30K 220V 60 DMX 50W HP	50 W
911401774703	BVP372 18LED 40K 220V 10 50W HP	50 W
911401774713	BVP372 18LED 40K 220V 10 DMX 50W HP	50 W
911401774723	BVP372 18LED 40K 220V 15 50W HP	50 W
911401774733	BVP372 18LED 40K 220V 15 DMX 50W HP	50 W
911401774743	BVP372 18LED 40K 220V 30 50W HP	50 W
911401774753	BVP372 18LED 40K 220V 30 DMX 50W HP	50 W
911401774763	BVP372 18LED 40K 220V 45 50W HP	50 W
911401774773	BVP372 18LED 40K 220V 45 DMX 50W HP	50 W
911401774783	BVP372 18LED 40K 220V 60 50W HP	50 W
911401774793	BVP372 18LED 40K 220V 60 DMX 50W HP	50 W
911401774803	BVP372 18LED RGB 220V 10 DMX 50W HP	50 W
911401774813	BVP372 18LED RGB 220V 15 DMX 50W HP	50 W
911401774823	BVP372 18LED RGB 220V 30 DMX 50W HP	50 W
911401774833	BVP372 18LED RGB 220V 45 DMX 50W HP	50 W
911401774843	BVP372 18LED RGB 220V 60 DMX 50W HP	50 W
911401774853	BVP372 20LED RGBNW 220V 10 DMX 50W HP	50 W
911401774863	BVP372 20LED RGBNW 220V 15 DMX 50W HP	50 W
911401774873	BVP372 20LED RGBNW 220V 30 DMX 50W HP	50 W
911401774883	BVP372 20LED RGBNW 220V 45 DMX 50W HP	50 W

Order Code	Full Product Name	Power Consumption
911401774893	BVP372 20LED RGBNW 220V 60 DMX 50W HP	50 W
911401774903	BVP372 20LED RGBWW 220V 10 DMX 50W HP	50 W
911401774913	BVP372 20LED RGBWW 220V 15 DMX 50W HP	50 W
911401774923	BVP372 20LED RGBWW 220V 30 DMX 50W HP	50 W
911401774933	BVP372 20LED RGBWW 220V 45 DMX 50W HP	50 W
911401774943	BVP372 20LED RGBWW 220V 60 DMX 50W HP	50 W
911401774953	BVP373 30LED 27K 220V 10 80W HP	80 W
911401774963	BVP373 30LED 27K 220V 10 DMX 80W HP	80 W
911401774973	BVP373 30LED 27K 220V 15 80W HP	80 W
911401774983	BVP373 30LED 27K 220V 15 DMX 80W HP	80 W
911401774993	BVP373 30LED 27K 220V 30 80W HP	80 W
911401775003	BVP373 30LED 27K 220V 30 DMX 80W HP	80 W
911401775013	BVP373 30LED 27K 220V 45 80W HP	80 W
911401775023	BVP373 30LED 27K 220V 45 DMX 80W HP	80 W
911401775033	BVP373 30LED 27K 220V 60 80W HP	80 W
911401775043	BVP373 30LED 27K 220V 60 DMX 80W HP	80 W
911401775053	BVP373 30LED 30K 220V 10 80W HP	80 W
911401775063	BVP373 30LED 30K 220V 10 DMX 80W HP	80 W
911401775073	BVP373 30LED 30K 220V 15 80W HP	80 W
911401775083	BVP373 30LED 30K 220V 15 DMX 80W HP	80 W
911401775093	BVP373 30LED 30K 220V 30 80W HP	80 W
911401775103	BVP373 30LED 30K 220V 30 DMX 80W HP	80 W
911401775113	BVP373 30LED 30K 220V 45 80W HP	80 W
911401775123	BVP373 30LED 30K 220V 45 DMX 80W HP	80 W
911401775133	BVP373 30LED 30K 220V 60 80W HP	80 W
911401775143	BVP373 30LED 30K 220V 60 DMX 80W HP	80 W
911401775153	BVP373 30LED 40K 220V 10 80W HP	80 W
911401775163	BVP373 30LED 40K 220V 10 DMX 80W HP	80 W
911401775173	BVP373 30LED 40K 220V 15 80W HP	80 W
911401775183	BVP373 30LED 40K 220V 15 DMX 80W HP	80 W
911401775193	BVP373 30LED 40K 220V 30 80W HP	80 W
911401775203	BVP373 30LED 40K 220V 30 DMX 80W HP	80 W
911401775213	BVP373 30LED 40K 220V 45 80W HP	80 W
911401775223	BVP373 30LED 40K 220V 45 DMX 80W HP	80 W
911401775233	BVP373 30LED 40K 220V 60 80W HP	80 W
911401775243	BVP373 30LED 40K 220V 60 DMX 80W HP	80 W
911401775253	BVP373 30LED RGB 220V 10 DMX 80W HP	80 W
911401775263	BVP373 30LED RGB 220V 15 DMX 80W HP	80 W
911401775273	BVP373 30LED RGB 220V 30 DMX 80W HP	80 W
911401775283	BVP373 30LED RGB 220V 45 DMX 80W HP	80 W
911401775293	BVP373 30LED RGB 220V 60 DMX 80W HP	80 W
911401775303	BVP373 32LED RGBNW 220V 10 DMX 80W HP	80 W

Order Code	Full Product Name	Power Consumption
911401775313	BVP373 32LED RGBNW 220V 15 DMX 80W HP	80 W
911401775323	BVP373 32LED RGBNW 220V 30 DMX 80W HP	80 W
911401775333	BVP373 32LED RGBNW 220V 45 DMX 80W HP	80 W
911401775343	BVP373 32LED RGBNW 220V 60 DMX 80W HP	80 W
911401775353	BVP373 32LED RGBWW 220V 10 DMX 80W HP	80 W
911401775363	BVP373 32LED RGBWW 220V 15 DMX 80W HP	80 W
911401775373	BVP373 32LED RGBWW 220V 30 DMX 80W HP	80 W
911401775383	BVP373 32LED RGBWW 220V 45 DMX 80W HP	80 W
911401775393	BVP373 32LED RGBWW 220V 60 DMX 80W HP	80 W
911401775403	BVP373 36LED 27K 220V 10 100W HP	100 W
911401775413	BVP373 36LED 27K 220V 10 DMX 100W HP	100 W
911401775423	BVP373 36LED 27K 220V 15 100W HP	100 W
911401775433	BVP373 36LED 27K 220V 15 DMX 100W HP	100 W
911401775443	BVP373 36LED 27K 220V 30 100W HP	100 W
911401775453	BVP373 36LED 27K 220V 30 DMX 100W HP	100 W
911401775463	BVP373 36LED 27K 220V 45 100W HP	100 W
911401775473	BVP373 36LED 27K 220V 45 DMX 100W HP	100 W
911401775483	BVP373 36LED 27K 220V 60 100W HP	100 W
911401775493	BVP373 36LED 27K 220V 60 DMX 100W HP	100 W
911401775503	BVP373 36LED 30K 220V 10 100W HP	100 W
911401775513	BVP373 36LED 30K 220V 10 DMX 100W HP	100 W
911401775523	BVP373 36LED 30K 220V 15 100W HP	100 W
911401775533	BVP373 36LED 30K 220V 15 DMX 100W HP	100 W
911401775543	BVP373 36LED 30K 220V 30 100W HP	100 W
911401775553	BVP373 36LED 30K 220V 30 DMX 100W HP	100 W
911401775563	BVP373 36LED 30K 220V 45 100W HP	100 W
911401775573	BVP373 36LED 30K 220V 45 DMX 100W HP	100 W
911401775583	BVP373 36LED 30K 220V 60 100W HP	100 W
911401775593	BVP373 36LED 30K 220V 60 DMX 100W HP	100 W
911401775603	BVP373 36LED 40K 220V 10 100W HP	100 W
911401775613	BVP373 36LED 40K 220V 10 DMX 100W HP	100 W
911401775623	BVP373 36LED 40K 220V 15 100W HP	100 W
911401775633	BVP373 36LED 40K 220V 15 DMX 100W HP	100 W
911401775643	BVP373 36LED 40K 220V 30 100W HP	100 W
911401775653	BVP373 36LED 40K 220V 30 DMX 100W HP	100 W
911401775663	BVP373 36LED 40K 220V 45 100W HP	100 W
911401775673	BVP373 36LED 40K 220V 45 DMX 100W HP	100 W
911401775683	BVP373 36LED 40K 220V 60 100W HP	100 W
911401775693	BVP373 36LED 40K 220V 60 DMX 100W HP	100 W
911401775703	BVP373 36LED RGB 220V 10 DMX 100W HP	100 W
911401775713	BVP373 36LED RGB 220V 15 DMX 100W HP	100 W
911401775723	BVP373 36LED RGB 220V 30 DMX 100W HP	100 W

Order Code	Full Product Name	Power Consumption
911401775733	BVP373 36LED RGB 220V 45 DMX 100W HP	100 W
911401775743	BVP373 36LED RGB 220V 60 DMX 100W HP	100 W
911401775753	BVP373 36LED RGBNW 220V 10 DMX 100W HP	100 W
911401775763	BVP373 36LED RGBNW 220V 15 DMX 100W HP	100 W
911401775773	BVP373 36LED RGBNW 220V 30 DMX 100W HP	100 W
911401775783	BVP373 36LED RGBNW 220V 45 DMX 100W HP	100 W
911401775793	BVP373 36LED RGBNW 220V 60 DMX 100W HP	100 W
911401775803	BVP373 36LED RGBWW 220V 10 DMX 100W HP	100 W
911401775813	BVP373 36LED RGBWW 220V 15 DMX 100W HP	100 W
911401775823	BVP373 36LED RGBWW 220V 30 DMX 100W HP	100 W
911401775833	BVP373 36LED RGBWW 220V 45 DMX 100W HP	100 W
911401775843	BVP373 36LED RGBWW 220V 60 DMX 100W HP	100 W
911401775853	BVP374 48LED 27K 220V 10 120W HP	120 W
911401775863	BVP374 48LED 27K 220V 10 DMX 120W HP	120 W
911401775873	BVP374 48LED 27K 220V 15 120W HP	120 W
911401775883	BVP374 48LED 27K 220V 15 DMX 120W HP	120 W
911401775893	BVP374 48LED 27K 220V 30 120W HP	120 W
911401775903	BVP374 48LED 27K 220V 30 DMX 120W HP	120 W
911401775913	BVP374 48LED 27K 220V 45 120W HP	120 W
911401775923	BVP374 48LED 27K 220V 45 DMX 120W HP	120 W
911401775933	BVP374 48LED 27K 220V 60 120W HP	120 W
911401775943	BVP374 48LED 27K 220V 60 DMX 120W HP	120 W
911401775953	BVP374 48LED 30K 220V 10 120W HP	120 W
911401775963	BVP374 48LED 30K 220V 10 DMX 120W HP	120 W
911401775973	BVP374 48LED 30K 220V 15 120W HP	120 W
911401775983	BVP374 48LED 30K 220V 15 DMX 120W HP	120 W
911401775993	BVP374 48LED 30K 220V 30 120W HP	120 W
911401776003	BVP374 48LED 30K 220V 30 DMX 120W HP	120 W
911401776013	BVP374 48LED 30K 220V 45 120W HP	120 W
911401776023	BVP374 48LED 30K 220V 45 DMX 120W HP	120 W
911401776033	BVP374 48LED 30K 220V 60 120W HP	120 W
911401776043	BVP374 48LED 30K 220V 60 DMX 120W HP	120 W
911401776053	BVP374 48LED 40K 220V 10 120W HP	120 W
911401776063	BVP374 48LED 40K 220V 10 DMX 120W HP	120 W
911401776073	BVP374 48LED 40K 220V 15 120W HP	120 W
911401776083	BVP374 48LED 40K 220V 15 DMX 120W HP	120 W
911401776093	BVP374 48LED 40K 220V 30 120W HP	120 W
911401776103	BVP374 48LED 40K 220V 30 DMX 120W HP	120 W
911401776113	BVP374 48LED 40K 220V 45 120W HP	120 W
911401776123	BVP374 48LED 40K 220V 45 DMX 120W HP	120 W
911401776133	BVP374 48LED 40K 220V 60 120W HP	120 W
911401776143	BVP374 48LED 40K 220V 60 DMX 120W HP	120 W

Order Code	Full Product Name	Power Consumption
911401776153	BVP374 48LED RGB 220V 10 DMX 120W HP	120 W
911401776163	BVP374 48LED RGB 220V 15 DMX 120W HP	120 W
911401776173	BVP374 48LED RGB 220V 30 DMX 120W HP	120 W
911401776183	BVP374 48LED RGB 220V 45 DMX 120W HP	120 W
911401776193	BVP374 48LED RGB 220V 60 DMX 120W HP	120 W
911401776203	BVP374 48LED RGBNW 220V 10 DMX 120W HP	120 W
911401776213	BVP374 48LED RGBNW 220V 15 DMX 120W HP	120 W
911401776223	BVP374 48LED RGBNW 220V 30 DMX 120W HP	120 W
911401776233	BVP374 48LED RGBNW 220V 45 DMX 120W HP	120 W
911401776243	BVP374 48LED RGBNW 220V 60 DMX 120W HP	120 W
911401776253	BVP374 48LED RGBWW 220V 10 DMX 120W HP	120 W
911401776263	BVP374 48LED RGBWW 220V 15 DMX 120W HP	120 W
911401776273	BVP374 48LED RGBWW 220V 30 DMX 120W HP	120 W
911401776283	BVP374 48LED RGBWW 220V 45 DMX 120W HP	120 W
911401776293	BVP374 48LED RGBWW 220V 60 DMX 120W HP	120 W
911401776303	BVP374 60LED 27K 220V 10 150W HP	150 W
911401776313	BVP374 60LED 27K 220V 10 DMX 150W HP	150 W
911401776323	BVP374 60LED 27K 220V 15 150W HP	150 W
911401776333	BVP374 60LED 27K 220V 15 DMX 150W HP	150 W
911401776343	BVP374 60LED 27K 220V 30 150W HP	150 W
911401776353	BVP374 60LED 27K 220V 30 DMX 150W HP	150 W
911401776363	BVP374 60LED 27K 220V 45 150W HP	150 W
911401776373	BVP374 60LED 27K 220V 45 DMX 150W HP	150 W
911401776383	BVP374 60LED 27K 220V 60 150W HP	150 W
911401776393	BVP374 60LED 27K 220V 60 DMX 150W HP	150 W
911401776403	BVP374 60LED 30K 220V 10 150W HP	150 W
911401776413	BVP374 60LED 30K 220V 10 DMX 150W HP	150 W
911401776423	BVP374 60LED 30K 220V 15 150W HP	150 W
911401776433	BVP374 60LED 30K 220V 15 DMX 150W HP	150 W
911401776443	BVP374 60LED 30K 220V 30 150W HP	150 W
911401776453	BVP374 60LED 30K 220V 30 DMX 150W HP	150 W
911401776463	BVP374 60LED 30K 220V 45 150W HP	150 W
911401776473	BVP374 60LED 30K 220V 45 DMX 150W HP	150 W
911401776483	BVP374 60LED 30K 220V 60 150W HP	150 W
911401776493	BVP374 60LED 30K 220V 60 DMX 150W HP	150 W
911401776503	BVP374 60LED 40K 220V 10 150W HP	150 W
911401776513	BVP374 60LED 40K 220V 10 DMX 150W HP	150 W
911401776523	BVP374 60LED 40K 220V 15 150W HP	150 W
911401776533	BVP374 60LED 40K 220V 15 DMX 150W HP	150 W
911401776543	BVP374 60LED 40K 220V 30 150W HP	150 W
911401776553	BVP374 60LED 40K 220V 30 DMX 150W HP	150 W
911401776563	BVP374 60LED 40K 220V 45 150W HP	150 W

Order Code	Full Product Name	Power Consumption
911401776573	BVP374 60LED 40K 220V 45 DMX 150W HP	150 W
911401776583	BVP374 60LED 40K 220V 60 150W HP	150 W
911401776593	BVP374 60LED 40K 220V 60 DMX 150W HP	150 W
911401776603	BVP374 60LED RGB 220V 10 DMX 150W HP	150 W
911401776613	BVP374 60LED RGB 220V 15 DMX 150W HP	150 W
911401776623	BVP374 60LED RGB 220V 30 DMX 150W HP	150 W
911401776633	BVP374 60LED RGB 220V 45 DMX 150W HP	150 W
911401776643	BVP374 60LED RGB 220V 60 DMX 150W HP	150 W
911401776653	BVP374 60LED RGBNW 220V 10 DMX 150W HP	150 W
911401776663	BVP374 60LED RGBNW 220V 15 DMX 150W HP	150 W
911401776673	BVP374 60LED RGBNW 220V 30 DMX 150W HP	150 W
911401776683	BVP374 60LED RGBNW 220V 45 DMX 150W HP	150 W
911401776693	BVP374 60LED RGBNW 220V 60 DMX 150W HP	150 W
911401776703	BVP374 60LED RGBWW 220V 10 DMX 150W HP	150 W
911401776713	BVP374 60LED RGBWW 220V 15 DMX 150W HP	150 W
911401776723	BVP374 60LED RGBWW 220V 30 DMX 150W HP	150 W
911401776733	BVP374 60LED RGBWW 220V 45 DMX 150W HP	150 W
911401776743	BVP374 60LED RGBWW 220V 60 DMX 150W HP	150 W

Controls and Dimming

Order Code	Full Product Name	Dimmable
911401773603	BVP371 12LED 27K 220V 10 24W HE	No
911401773613	BVP371 12LED 27K 220V 10 DMX 24W HE	Yes
911401773623	BVP371 12LED 27K 220V 15 24W HE	No
911401773633	BVP371 12LED 27K 220V 15 DMX 24W HE	Yes
911401773643	BVP371 12LED 27K 220V 30 24W HE	No
911401773653	BVP371 12LED 27K 220V 30 DMX 24W HE	Yes
911401773663	BVP371 12LED 27K 220V 45 24W HE	No
911401773673	BVP371 12LED 27K 220V 45 DMX 24W HE	Yes
911401773683	BVP371 12LED 27K 220V 60 24W HE	No
911401773693	BVP371 12LED 27K 220V 60 DMX 24W HE	Yes
911401773703	BVP371 12LED 30K 220V 10 24W HE	No
911401773713	BVP371 12LED 30K 220V 10 DMX 24W HE	Yes
911401773723	BVP371 12LED 30K 220V 15 24W HE	No
911401773733	BVP371 12LED 30K 220V 15 DMX 24W HE	Yes
911401773743	BVP371 12LED 30K 220V 30 24W HE	No
911401773753	BVP371 12LED 30K 220V 30 DMX 24W HE	Yes
911401773763	BVP371 12LED 30K 220V 45 24W HE	No
911401773773	BVP371 12LED 30K 220V 45 DMX 24W HE	Yes
911401773783	BVP371 12LED 30K 220V 60 24W HE	No
911401773793	BVP371 12LED 30K 220V 60 DMX 24W HE	Yes
911401773803	BVP371 12LED 40K 220V 10 24W HE	No

Order Code	Full Product Name	Dimmable
911401773813	BVP371 12LED 40K 220V 10 DMX 24W HE	Yes
911401773823	BVP371 12LED 40K 220V 15 24W HE	No
911401773833	BVP371 12LED 40K 220V 15 DMX 24W HE	Yes
911401773843	BVP371 12LED 40K 220V 30 24W HE	No
911401773853	BVP371 12LED 40K 220V 30 DMX 24W HE	Yes
911401773863	BVP371 12LED 40K 220V 45 24W HE	No
911401773873	BVP371 12LED 40K 220V 45 DMX 24W HE	Yes
911401773883	BVP371 12LED 40K 220V 60 24W HE	No
911401773893	BVP371 12LED 40K 220V 60 DMX 24W HE	Yes
911401773903	BVP371 12LED RGB 220V 10 DMX 24W HE	Yes
911401773913	BVP371 12LED RGB 220V 15 DMX 24W HE	Yes
911401773923	BVP371 12LED RGB 220V 30 DMX 24W HE	Yes
911401773933	BVP371 12LED RGB 220V 45 DMX 24W HE	Yes
911401773943	BVP371 12LED RGB 220V 60 DMX 24W HE	Yes
911401773953	BVP371 12LED RGBNW 220V 10 DMX 24W HE	Yes
911401773963	BVP371 12LED RGBNW 220V 15 DMX 24W HE	Yes
911401773973	BVP371 12LED RGBNW 220V 30 DMX 24W HE	Yes
911401773983	BVP371 12LED RGBNW 220V 45 DMX 24W HE	Yes
911401773993	BVP371 12LED RGBNW 220V 60 DMX 24W HE	Yes
911401774003	BVP371 12LED RGBWW 220V 10 DMX 24W HE	Yes
911401774013	BVP371 12LED RGBWW 220V 15 DMX 24W HE	Yes
911401774023	BVP371 12LED RGBWW 220V 30 DMX 24W HE	Yes
911401774033	BVP371 12LED RGBWW 220V 45 DMX 24W HE	Yes
911401774043	BVP371 12LED RGBWW 220V 60 DMX 24W HE	Yes
911401774053	BVP372 15LED RGB 220V 10 DMX 40W HP	Yes
911401774063	BVP372 15LED RGB 220V 15 DMX 40W HP	Yes
911401774073	BVP372 15LED RGB 220V 30 DMX 40W HP	Yes
911401774083	BVP372 15LED RGB 220V 45 DMX 40W HP	Yes
911401774093	BVP372 15LED RGB 220V 60 DMX 40W HP	Yes
911401774103	BVP372 16LED 27K 220V 10 40W HP	No
911401774113	BVP372 16LED 27K 220V 10 DMX 40W HP	Yes
911401774123	BVP372 16LED 27K 220V 15 40W HP	No
911401774133	BVP372 16LED 27K 220V 15 DMX 40W HP	Yes
911401774143	BVP372 16LED 27K 220V 30 40W HP	No
911401774153	BVP372 16LED 27K 220V 30 DMX 40W HP	Yes
911401774163	BVP372 16LED 27K 220V 45 40W HP	No
911401774173	BVP372 16LED 27K 220V 45 DMX 40W HP	Yes
911401774183	BVP372 16LED 27K 220V 60 40W HP	No
911401774193	BVP372 16LED 27K 220V 60 DMX 40W HP	Yes
911401774203	BVP372 16LED 30K 220V 10 40W HP	No
911401774213	BVP372 16LED 30K 220V 10 DMX 40W HP	Yes
911401774223	BVP372 16LED 30K 220V 15 40W HP	No

Order Code	Full Product Name	Dimmable
911401774233	BVP372 16LED 30K 220V 15 DMX 40W HP	Yes
911401774243	BVP372 16LED 30K 220V 30 40W HP	No
911401774253	BVP372 16LED 30K 220V 30 DMX 40W HP	Yes
911401774263	BVP372 16LED 30K 220V 45 40W HP	No
911401774273	BVP372 16LED 30K 220V 45 DMX 40W HP	Yes
911401774283	BVP372 16LED 30K 220V 60 40W HP	No
911401774293	BVP372 16LED 30K 220V 60 DMX 40W HP	Yes
911401774303	BVP372 16LED 40K 220V 10 40W HP	No
911401774313	BVP372 16LED 40K 220V 10 DMX 40W HP	Yes
911401774323	BVP372 16LED 40K 220V 15 40W HP	No
911401774333	BVP372 16LED 40K 220V 15 DMX 40W HP	Yes
911401774343	BVP372 16LED 40K 220V 30 40W HP	No
911401774353	BVP372 16LED 40K 220V 30 DMX 40W HP	Yes
911401774363	BVP372 16LED 40K 220V 45 40W HP	No
911401774373	BVP372 16LED 40K 220V 45 DMX 40W HP	Yes
911401774383	BVP372 16LED 40K 220V 60 40W HP	No
911401774393	BVP372 16LED 40K 220V 60 DMX 40W HP	Yes
911401774403	BVP372 16LED RGBNW 220V 10 DMX 40W HP	Yes
911401774413	BVP372 16LED RGBNW 220V 15 DMX 40W HP	Yes
911401774423	BVP372 16LED RGBNW 220V 30 DMX 40W HP	Yes
911401774433	BVP372 16LED RGBNW 220V 45 DMX 40W HP	Yes
911401774443	BVP372 16LED RGBNW 220V 60 DMX 40W HP	Yes
911401774453	BVP372 16LED RGBWW 220V 10 DMX 40W HP	Yes
911401774463	BVP372 16LED RGBWW 220V 15 DMX 40W HP	Yes
911401774473	BVP372 16LED RGBWW 220V 30 DMX 40W HP	Yes
911401774483	BVP372 16LED RGBWW 220V 45 DMX 40W HP	Yes
911401774493	BVP372 16LED RGBWW 220V 60 DMX 40W HP	Yes
911401774503	BVP372 18LED 27K 220V 10 50W HP	No
911401774513	BVP372 18LED 27K 220V 10 DMX 50W HP	Yes
911401774523	BVP372 18LED 27K 220V 15 50W HP	No
911401774533	BVP372 18LED 27K 220V 15 DMX 50W HP	Yes
911401774543	BVP372 18LED 27K 220V 30 50W HP	No
911401774553	BVP372 18LED 27K 220V 30 DMX 50W HP	Yes
911401774563	BVP372 18LED 27K 220V 45 50W HP	No
911401774573	BVP372 18LED 27K 220V 45 DMX 50W HP	Yes
911401774583	BVP372 18LED 27K 220V 60 50W HP	No
911401774593	BVP372 18LED 27K 220V 60 DMX 50W HP	Yes
911401774603	BVP372 18LED 30K 220V 10 50W HP	No
911401774613	BVP372 18LED 30K 220V 10 DMX 50W HP	Yes
911401774623	BVP372 18LED 30K 220V 15 50W HP	No
911401774633	BVP372 18LED 30K 220V 15 DMX 50W HP	Yes
911401774643	BVP372 18LED 30K 220V 30 50W HP	No

Order Code	Full Product Name	Dimmable
911401774653	BVP372 18LED 30K 220V 30 DMX 50W HP	Yes
911401774663	BVP372 18LED 30K 220V 45 50W HP	No
911401774673	BVP372 18LED 30K 220V 45 DMX 50W HP	Yes
911401774683	BVP372 18LED 30K 220V 60 50W HP	No
911401774693	BVP372 18LED 30K 220V 60 DMX 50W HP	Yes
911401774703	BVP372 18LED 40K 220V 10 50W HP	No
911401774713	BVP372 18LED 40K 220V 10 DMX 50W HP	Yes
911401774723	BVP372 18LED 40K 220V 15 50W HP	No
911401774733	BVP372 18LED 40K 220V 15 DMX 50W HP	Yes
911401774743	BVP372 18LED 40K 220V 30 50W HP	No
911401774753	BVP372 18LED 40K 220V 30 DMX 50W HP	Yes
911401774763	BVP372 18LED 40K 220V 45 50W HP	No
911401774773	BVP372 18LED 40K 220V 45 DMX 50W HP	Yes
911401774783	BVP372 18LED 40K 220V 60 50W HP	No
911401774793	BVP372 18LED 40K 220V 60 DMX 50W HP	Yes
911401774803	BVP372 18LED RGB 220V 10 DMX 50W HP	Yes
911401774813	BVP372 18LED RGB 220V 15 DMX 50W HP	Yes
911401774823	BVP372 18LED RGB 220V 30 DMX 50W HP	Yes
911401774833	BVP372 18LED RGB 220V 45 DMX 50W HP	Yes
911401774843	BVP372 18LED RGB 220V 60 DMX 50W HP	Yes
911401774853	BVP372 20LED RGBNW 220V 10 DMX 50W HP	Yes
911401774863	BVP372 20LED RGBNW 220V 15 DMX 50W HP	Yes
911401774873	BVP372 20LED RGBNW 220V 30 DMX 50W HP	Yes
911401774883	BVP372 20LED RGBNW 220V 45 DMX 50W HP	Yes
911401774893	BVP372 20LED RGBNW 220V 60 DMX 50W HP	Yes
911401774903	BVP372 20LED RGBWW 220V 10 DMX 50W HP	Yes
911401774913	BVP372 20LED RGBWW 220V 15 DMX 50W HP	Yes
911401774923	BVP372 20LED RGBWW 220V 30 DMX 50W HP	Yes
911401774933	BVP372 20LED RGBWW 220V 45 DMX 50W HP	Yes
911401774943	BVP372 20LED RGBWW 220V 60 DMX 50W HP	Yes
911401774953	BVP373 30LED 27K 220V 10 80W HP	No
911401774963	BVP373 30LED 27K 220V 10 DMX 80W HP	Yes
911401774973	BVP373 30LED 27K 220V 15 80W HP	No
911401774983	BVP373 30LED 27K 220V 15 DMX 80W HP	Yes
911401774993	BVP373 30LED 27K 220V 30 80W HP	No
911401775003	BVP373 30LED 27K 220V 30 DMX 80W HP	Yes
911401775013	BVP373 30LED 27K 220V 45 80W HP	No
911401775023	BVP373 30LED 27K 220V 45 DMX 80W HP	Yes
911401775033	BVP373 30LED 27K 220V 60 80W HP	No
911401775043	BVP373 30LED 27K 220V 60 DMX 80W HP	Yes
911401775053	BVP373 30LED 30K 220V 10 80W HP	No
911401775063	BVP373 30LED 30K 220V 10 DMX 80W HP	Yes

Order Code	Full Product Name	Dimmable
911401775073	BVP373 30LED 30K 220V 15 80W HP	No
911401775083	BVP373 30LED 30K 220V 15 DMX 80W HP	Yes
911401775093	BVP373 30LED 30K 220V 30 80W HP	No
911401775103	BVP373 30LED 30K 220V 30 DMX 80W HP	Yes
911401775113	BVP373 30LED 30K 220V 45 80W HP	No
911401775123	BVP373 30LED 30K 220V 45 DMX 80W HP	Yes
911401775133	BVP373 30LED 30K 220V 60 80W HP	No
911401775143	BVP373 30LED 30K 220V 60 DMX 80W HP	Yes
911401775153	BVP373 30LED 40K 220V 10 80W HP	No
911401775163	BVP373 30LED 40K 220V 10 DMX 80W HP	Yes
911401775173	BVP373 30LED 40K 220V 15 80W HP	No
911401775183	BVP373 30LED 40K 220V 15 DMX 80W HP	Yes
911401775193	BVP373 30LED 40K 220V 30 80W HP	No
911401775203	BVP373 30LED 40K 220V 30 DMX 80W HP	Yes
911401775213	BVP373 30LED 40K 220V 45 80W HP	No
911401775223	BVP373 30LED 40K 220V 45 DMX 80W HP	Yes
911401775233	BVP373 30LED 40K 220V 60 80W HP	No
911401775243	BVP373 30LED 40K 220V 60 DMX 80W HP	Yes
911401775253	BVP373 30LED RGB 220V 10 DMX 80W HP	Yes
911401775263	BVP373 30LED RGB 220V 15 DMX 80W HP	Yes
911401775273	BVP373 30LED RGB 220V 30 DMX 80W HP	Yes
911401775283	BVP373 30LED RGB 220V 45 DMX 80W HP	Yes
911401775293	BVP373 30LED RGB 220V 60 DMX 80W HP	Yes
911401775303	BVP373 32LED RGBNW 220V 10 DMX 80W HP	Yes
911401775313	BVP373 32LED RGBNW 220V 15 DMX 80W HP	Yes
911401775323	BVP373 32LED RGBNW 220V 30 DMX 80W HP	Yes
911401775333	BVP373 32LED RGBNW 220V 45 DMX 80W HP	Yes
911401775343	BVP373 32LED RGBNW 220V 60 DMX 80W HP	Yes
911401775353	BVP373 32LED RGBWW 220V 10 DMX 80W HP	Yes
911401775363	BVP373 32LED RGBWW 220V 15 DMX 80W HP	Yes
911401775373	BVP373 32LED RGBWW 220V 30 DMX 80W HP	Yes
911401775383	BVP373 32LED RGBWW 220V 45 DMX 80W HP	Yes
911401775393	BVP373 32LED RGBWW 220V 60 DMX 80W HP	Yes
911401775403	BVP373 36LED 27K 220V 10 100W HP	No
911401775413	BVP373 36LED 27K 220V 10 DMX 100W HP	Yes
911401775423	BVP373 36LED 27K 220V 15 100W HP	No
911401775433	BVP373 36LED 27K 220V 15 DMX 100W HP	Yes
911401775443	BVP373 36LED 27K 220V 30 100W HP	No
911401775453	BVP373 36LED 27K 220V 30 DMX 100W HP	Yes
911401775463	BVP373 36LED 27K 220V 45 100W HP	No
911401775473	BVP373 36LED 27K 220V 45 DMX 100W HP	Yes
911401775483	BVP373 36LED 27K 220V 60 100W HP	No

Order Code	Full Product Name	Dimmable
911401775493	BVP373 36LED 27K 220V 60 DMX 100W HP	Yes
911401775503	BVP373 36LED 30K 220V 10 100W HP	No
911401775513	BVP373 36LED 30K 220V 10 DMX 100W HP	Yes
911401775523	BVP373 36LED 30K 220V 15 100W HP	No
911401775533	BVP373 36LED 30K 220V 15 DMX 100W HP	Yes
911401775543	BVP373 36LED 30K 220V 30 100W HP	No
911401775553	BVP373 36LED 30K 220V 30 DMX 100W HP	Yes
911401775563	BVP373 36LED 30K 220V 45 100W HP	No
911401775573	BVP373 36LED 30K 220V 45 DMX 100W HP	Yes
911401775583	BVP373 36LED 30K 220V 60 100W HP	No
911401775593	BVP373 36LED 30K 220V 60 DMX 100W HP	Yes
911401775603	BVP373 36LED 40K 220V 10 100W HP	No
911401775613	BVP373 36LED 40K 220V 10 DMX 100W HP	Yes
911401775623	BVP373 36LED 40K 220V 15 100W HP	No
911401775633	BVP373 36LED 40K 220V 15 DMX 100W HP	Yes
911401775643	BVP373 36LED 40K 220V 30 100W HP	No
911401775653	BVP373 36LED 40K 220V 30 DMX 100W HP	Yes
911401775663	BVP373 36LED 40K 220V 45 100W HP	No
911401775673	BVP373 36LED 40K 220V 45 DMX 100W HP	Yes
911401775683	BVP373 36LED 40K 220V 60 100W HP	No
911401775693	BVP373 36LED 40K 220V 60 DMX 100W HP	Yes
911401775703	BVP373 36LED RGB 220V 10 DMX 100W HP	Yes
911401775713	BVP373 36LED RGB 220V 15 DMX 100W HP	Yes
911401775723	BVP373 36LED RGB 220V 30 DMX 100W HP	Yes
911401775733	BVP373 36LED RGB 220V 45 DMX 100W HP	Yes
911401775743	BVP373 36LED RGB 220V 60 DMX 100W HP	Yes
911401775753	BVP373 36LED RGBNW 220V 10 DMX 100W HP	Yes
911401775763	BVP373 36LED RGBNW 220V 15 DMX 100W HP	Yes
911401775773	BVP373 36LED RGBNW 220V 30 DMX 100W HP	Yes
911401775783	BVP373 36LED RGBNW 220V 45 DMX 100W HP	Yes
911401775793	BVP373 36LED RGBNW 220V 60 DMX 100W HP	Yes
911401775803	BVP373 36LED RGBWW 220V 10 DMX 100W HP	Yes
911401775813	BVP373 36LED RGBWW 220V 15 DMX 100W HP	Yes
911401775823	BVP373 36LED RGBWW 220V 30 DMX 100W HP	Yes
911401775833	BVP373 36LED RGBWW 220V 45 DMX 100W HP	Yes
911401775843	BVP373 36LED RGBWW 220V 60 DMX 100W HP	Yes
911401775853	BVP374 48LED 27K 220V 10 120W HP	No
911401775863	BVP374 48LED 27K 220V 10 DMX 120W HP	Yes
911401775873	BVP374 48LED 27K 220V 15 120W HP	No
911401775883	BVP374 48LED 27K 220V 15 DMX 120W HP	Yes
911401775893	BVP374 48LED 27K 220V 30 120W HP	No
911401775903	BVP374 48LED 27K 220V 30 DMX 120W HP	Yes

Order Code	Full Product Name	Dimmable
911401775913	BVP374 48LED 27K 220V 45 120W HP	No
911401775923	BVP374 48LED 27K 220V 45 DMX 120W HP	Yes
911401775933	BVP374 48LED 27K 220V 60 120W HP	No
911401775943	BVP374 48LED 27K 220V 60 DMX 120W HP	Yes
911401775953	BVP374 48LED 30K 220V 10 120W HP	No
911401775963	BVP374 48LED 30K 220V 10 DMX 120W HP	Yes
911401775973	BVP374 48LED 30K 220V 15 120W HP	No
911401775983	BVP374 48LED 30K 220V 15 DMX 120W HP	Yes
911401775993	BVP374 48LED 30K 220V 30 120W HP	No
911401776003	BVP374 48LED 30K 220V 30 DMX 120W HP	Yes
911401776013	BVP374 48LED 30K 220V 45 120W HP	No
911401776023	BVP374 48LED 30K 220V 45 DMX 120W HP	Yes
911401776033	BVP374 48LED 30K 220V 60 120W HP	No
911401776043	BVP374 48LED 30K 220V 60 DMX 120W HP	Yes
911401776053	BVP374 48LED 40K 220V 10 120W HP	No
911401776063	BVP374 48LED 40K 220V 10 DMX 120W HP	Yes
911401776073	BVP374 48LED 40K 220V 15 120W HP	No
911401776083	BVP374 48LED 40K 220V 15 DMX 120W HP	Yes
911401776093	BVP374 48LED 40K 220V 30 120W HP	No
911401776103	BVP374 48LED 40K 220V 30 DMX 120W HP	Yes
911401776113	BVP374 48LED 40K 220V 45 120W HP	No
911401776123	BVP374 48LED 40K 220V 45 DMX 120W HP	Yes
911401776133	BVP374 48LED 40K 220V 60 120W HP	No
911401776143	BVP374 48LED 40K 220V 60 DMX 120W HP	Yes
911401776153	BVP374 48LED RGB 220V 10 DMX 120W HP	Yes
911401776163	BVP374 48LED RGB 220V 15 DMX 120W HP	Yes
911401776173	BVP374 48LED RGB 220V 30 DMX 120W HP	Yes
911401776183	BVP374 48LED RGB 220V 45 DMX 120W HP	Yes
911401776193	BVP374 48LED RGB 220V 60 DMX 120W HP	Yes
911401776203	BVP374 48LED RGBNW 220V 10 DMX 120W HP	Yes
911401776213	BVP374 48LED RGBNW 220V 15 DMX 120W HP	Yes
911401776223	BVP374 48LED RGBNW 220V 30 DMX 120W HP	Yes
911401776233	BVP374 48LED RGBNW 220V 45 DMX 120W HP	Yes
911401776243	BVP374 48LED RGBNW 220V 60 DMX 120W HP	Yes
911401776253	BVP374 48LED RGBWW 220V 10 DMX 120W HP	Yes
911401776263	BVP374 48LED RGBWW 220V 15 DMX 120W HP	Yes
911401776273	BVP374 48LED RGBWW 220V 30 DMX 120W HP	Yes
911401776283	BVP374 48LED RGBWW 220V 45 DMX 120W HP	Yes
911401776293	BVP374 48LED RGBWW 220V 60 DMX 120W HP	Yes
911401776303	BVP374 60LED 27K 220V 10 150W HP	No
911401776313	BVP374 60LED 27K 220V 10 DMX 150W HP	Yes
911401776323	BVP374 60LED 27K 220V 15 150W HP	No

Order Code	Full Product Name	Dimmable
911401776333	BVP374 60LED 27K 220V 15 DMX 150W HP	Yes
911401776343	BVP374 60LED 27K 220V 30 150W HP	No
911401776353	BVP374 60LED 27K 220V 30 DMX 150W HP	Yes
911401776363	BVP374 60LED 27K 220V 45 150W HP	No
911401776373	BVP374 60LED 27K 220V 45 DMX 150W HP	Yes
911401776383	BVP374 60LED 27K 220V 60 150W HP	No
911401776393	BVP374 60LED 27K 220V 60 DMX 150W HP	Yes
911401776403	BVP374 60LED 30K 220V 10 150W HP	No
911401776413	BVP374 60LED 30K 220V 10 DMX 150W HP	Yes
911401776423	BVP374 60LED 30K 220V 15 150W HP	No
911401776433	BVP374 60LED 30K 220V 15 DMX 150W HP	Yes
911401776443	BVP374 60LED 30K 220V 30 150W HP	No
911401776453	BVP374 60LED 30K 220V 30 DMX 150W HP	Yes
911401776463	BVP374 60LED 30K 220V 45 150W HP	No
911401776473	BVP374 60LED 30K 220V 45 DMX 150W HP	Yes
911401776483	BVP374 60LED 30K 220V 60 150W HP	No
911401776493	BVP374 60LED 30K 220V 60 DMX 150W HP	Yes
911401776503	BVP374 60LED 40K 220V 10 150W HP	No
911401776513	BVP374 60LED 40K 220V 10 DMX 150W HP	Yes
911401776523	BVP374 60LED 40K 220V 15 150W HP	No
911401776533	BVP374 60LED 40K 220V 15 DMX 150W HP	Yes
911401776543	BVP374 60LED 40K 220V 30 150W HP	No
911401776553	BVP374 60LED 40K 220V 30 DMX 150W HP	Yes
911401776563	BVP374 60LED 40K 220V 45 150W HP	No
911401776573	BVP374 60LED 40K 220V 45 DMX 150W HP	Yes
911401776583	BVP374 60LED 40K 220V 60 150W HP	No
911401776593	BVP374 60LED 40K 220V 60 DMX 150W HP	Yes
911401776603	BVP374 60LED RGB 220V 10 DMX 150W HP	Yes
911401776613	BVP374 60LED RGB 220V 15 DMX 150W HP	Yes
911401776623	BVP374 60LED RGB 220V 30 DMX 150W HP	Yes
911401776633	BVP374 60LED RGB 220V 45 DMX 150W HP	Yes
911401776643	BVP374 60LED RGB 220V 60 DMX 150W HP	Yes
911401776653	BVP374 60LED RGBNW 220V 10 DMX 150W HP	Yes
911401776663	BVP374 60LED RGBNW 220V 15 DMX 150W HP	Yes
911401776673	BVP374 60LED RGBNW 220V 30 DMX 150W HP	Yes
911401776683	BVP374 60LED RGBNW 220V 45 DMX 150W HP	Yes
911401776693	BVP374 60LED RGBNW 220V 60 DMX 150W HP	Yes
911401776703	BVP374 60LED RGBWW 220V 10 DMX 150W HP	Yes
911401776713	BVP374 60LED RGBWW 220V 15 DMX 150W HP	Yes
911401776723	BVP374 60LED RGBWW 220V 30 DMX 150W HP	Yes
911401776733	BVP374 60LED RGBWW 220V 45 DMX 150W HP	Yes
911401776743	BVP374 60LED RGBWW 220V 60 DMX 150W HP	Yes

© 2026 Signify Holding. All rights reserved. The information provided herein is subject to change, without notice. Signify does not give any representation or warranty as to the accuracy or completeness of the information included herein and shall not be liable for any action in reliance thereon. The information presented in this document is not intended as any commercial offer and does not form part of any quotation or contract, unless otherwise agreed by Signify. Philips and the Philips Shield Emblem are registered trademarks of Koninklijke Philips N.V.