PHILIPS

Bright Star BVS211/ BVS221

BVS221

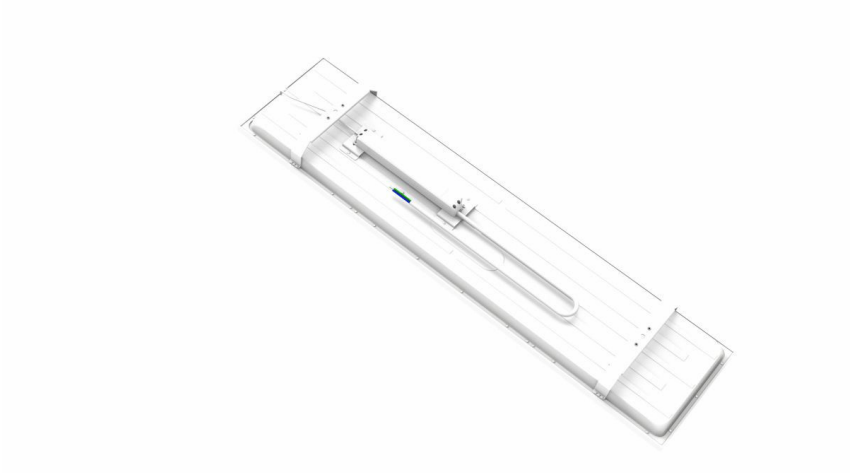

Create comfort and efficient for your badminton courts

Philips Bright Star is a linear lighting solution designed specifically for indoor recreational sports venues, providing bright, anti-glare, and energy-efficient white light to enhance visibility and visual comfort for facilities such as badminton courts. Featuring a sleek, streamlined design, Bright Star provides clean, continuous illumination ideal for court lighting. Its one-piece stamped steel backplate guarantees structural strength, while the front optical design effectively controls glare in the direction of movement—perfectly balancing aesthetics and performance. With versatile installation options—including wall mount, suspension, and V-type dual-hanging adjustable-angle accessories—Bright Star offers flexible deployment to meet diverse lighting needs. This high-performance linear luminaire combines modern design, reliability, and superior lighting quality for an engaging indoor recreational sports experience.

Benefits

- Linear illumination for ClassI/II/III Standard badminton courts
- Excellent anti-glare control in the direction of movement
- Simple and sustainable design, and reliable performance
- Flexible and easy to install

Applications

- Indoor recreational sports venues
- Badminton courts

Features

- Two types of anti-glare control: louver or micro-prism lens
- Flicker free
- High quality white light: CRI80, 4000K/5700K
- High system efficacy up to 135lm/W
- IP40 and IK03 protection
- 50K hours lifetime
- Two types of mounting accessory for wall/hanging/V-type double hangers

Versions

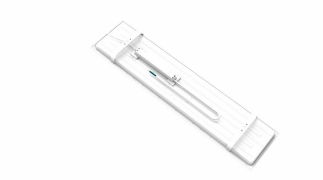

BrightStar Linear Sport light

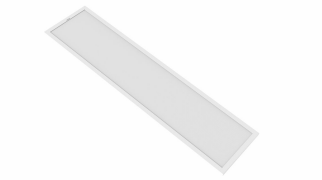

BrightStar Linear Sport light

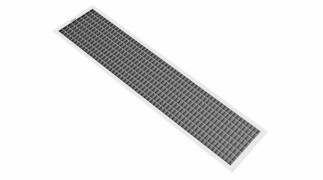

BrightStar Linear Sport light

Dimensional drawing

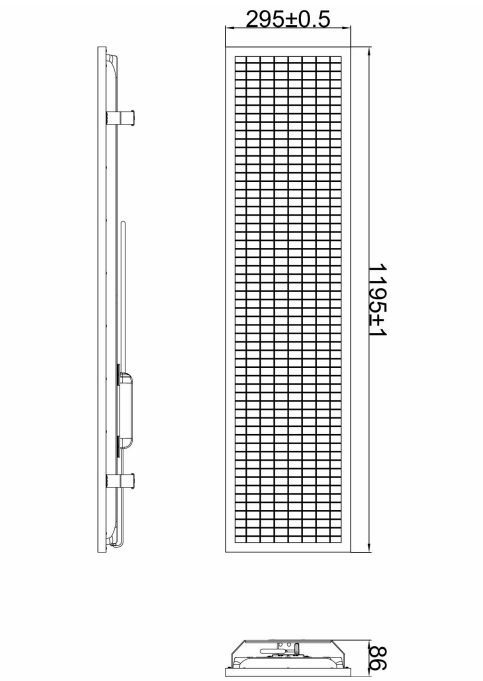

BVS221 LED104/840 80W 220-240V GC

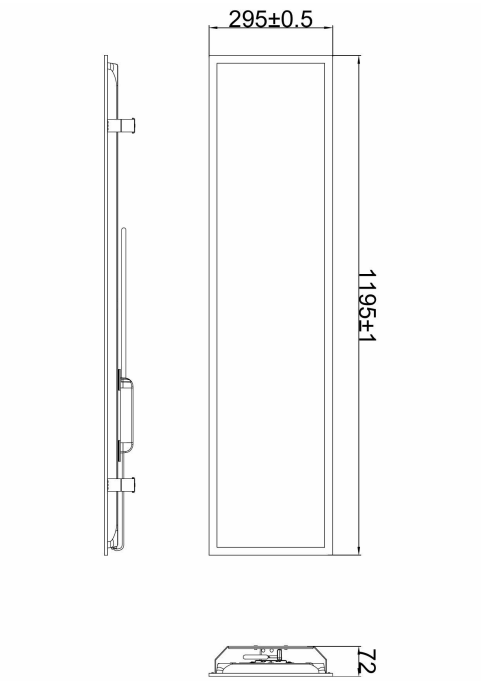

BVS211 LED104/840 80W 220-240V GC

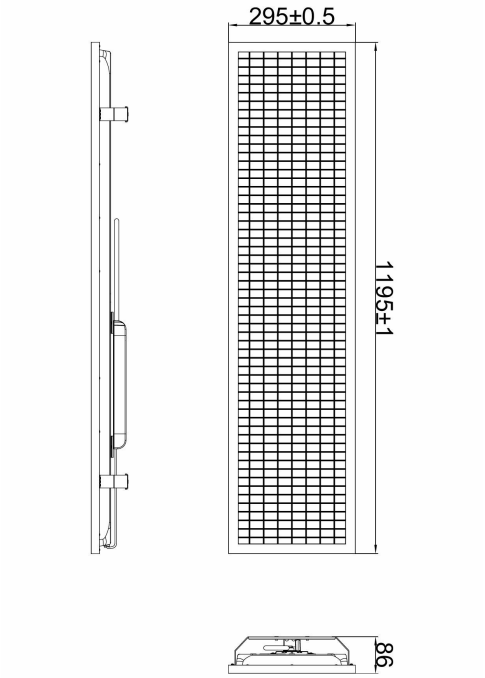

BVS221 LED195/840 150W 220-240V GC

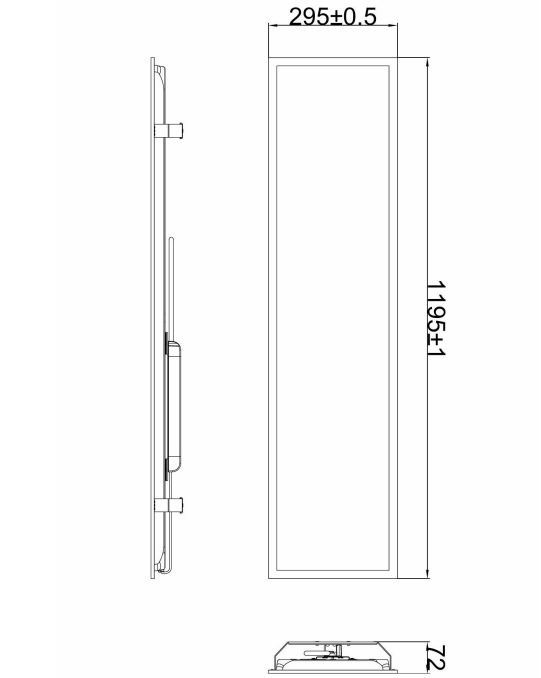

BVS211 LED195/857 150W 220-240V GC

General Information

Driver included	Yes

Light Technical

Color rendering index (CRI)	80

Operating and Electrical

Input Voltage	220-240 V
Line Frequency	50 to 60 Hz
Protection class IEC	Safety class I

Controls and Dimming

Dimmable	No

Mechanical and Housing

Housing Color	White RAL 9003
Ingress protection code	IP40 [Wire-protected]
Mech. impact protection code	IK03 [0.3 J]

Approval and Application

CE mark	No
Ambient temperature range	-20 to +45 °C

Initial Performance (IEC Compliant)

Luminous flux tolerance	+/-10%

Light Technical

Order Code	Full Product Name	Luminous Flux	Correlated Color Temperature (Nom)	Luminous Efficacy (rated) (Nom)	Beam angle of light source
911401902474	BVS211 LED104/840 80W 220-240V GC	10,800 lm	4000 K	135 lm/W	90 degree(s)
911401902475	BVS211 LED156/840 120W 220-240V GC	16,200 lm	4000 K	135 lm/W	90 degree(s)
911401902476	BVS211 LED195/840 150W 220-240V GC	20,250 lm	4000 K	135 lm/W	90 degree(s)
911401902477	BVS211 LED104/857 80W 220-240V GC	10,800 lm	5700 K	135 lm/W	90 degree(s)
911401902478	BVS211 LED156/857 120W 220-240V GC	16,200 lm	5700 K	135 lm/W	90 degree(s)
911401902479	BVS211 LED195/857 150W 220-240V GC	20,250 lm	5700 K	135 lm/W	90 degree(s)
911401902480	BVS221 LED104/840 80W 220-240V GC	10,400 lm	4000 K	130 lm/W	100 degree(s)
911401902481	BVS221 LED156/840 120W 220-240V GC	15,600 lm	4000 K	130 lm/W	100 degree(s)
911401902482	BVS221 LED195/840 150W 220-240V GC	19,500 lm	4000 K	130 lm/W	100 degree(s)
911401902483	BVS221 LED104/857 80W 220-240V GC	10,400 lm	5700 K	130 lm/W	100 degree(s)
911401902484	BVS221 LED156/857 120W 220-240V GC	15,600 lm	5700 K	130 lm/W	100 degree(s)
911401902485	BVS221 LED195/857 150W 220-240V GC	19,500 lm	5700 K	130 lm/W	100 degree(s)

Operating and Electrical

Order Code	Full Product Name	Power Consumption
911401902474	BVS211 LED104/840 80W 220-240V GC	80 W
911401902475	BVS211 LED156/840 120W 220-240V GC	120 W
911401902476	BVS211 LED195/840 150W 220-240V GC	150 W
911401902477	BVS211 LED104/857 80W 220-240V GC	80 W
911401902478	BVS211 LED156/857 120W 220-240V GC	120 W
911401902479	BVS211 LED195/857 150W 220-240V GC	150 W
911401902480	BVS221 LED104/840 80W 220-240V GC	80 W
911401902481	BVS221 LED156/840 120W 220-240V GC	120 W
911401902482	BVS221 LED195/840 150W 220-240V GC	150 W
911401902483	BVS221 LED104/857 80W 220-240V GC	80 W
911401902484	BVS221 LED156/857 120W 220-240V GC	120 W
911401902485	BVS221 LED195/857 150W 220-240V GC	150 W

Mechanical and Housing

Order Code	Full Product Name	Optical cover type
911401902474	BVS211 LED104/840 80W 220-240V GC	Microprismatic cover
911401902475	BVS211 LED156/840 120W 220-240V GC	Microprismatic cover
911401902476	BVS211 LED195/840 150W 220-240V GC	Microprismatic cover

Order Code	Full Product Name	Optical cover type
911401902477	BVS211 LED104/857 80W 220-240V GC	Microprismatic cover
911401902478	BVS211 LED156/857 120W 220-240V GC	Microprismatic cover
911401902479	BVS211 LED195/857 150W 220-240V GC	Microprismatic cover
911401902480	BVS221 LED104/840 80W 220-240V GC	Structured bowl/cover
911401902481	BVS221 LED156/840 120W 220-240V GC	Structured bowl/cover
911401902482	BVS221 LED195/840 150W 220-240V GC	Structured bowl/cover
911401902483	BVS221 LED104/857 80W 220-240V GC	Structured bowl/cover
911401902484	BVS221 LED156/857 120W 220-240V GC	Structured bowl/cover
911401902485	BVS221 LED195/857 150W 220-240V GC	Structured bowl/cover

© 2026 Signify Holding. All rights reserved. The information provided herein is subject to change, without notice. Signify does not give any representation or warranty as to the accuracy or completeness of the information included herein and shall not be liable for any action in reliance thereon. The information presented in this document is not intended as any commercial offer and does not form part of any quotation or contract, unless otherwise agreed by Signify. Philips and the Philips Shield Emblem are registered trademarks of Koninklijke Philips N.V.