PHILIPS

Ledinaire waterproof

WT060C



Proven quality. Effortless installation. Every time. Your dependable and affordable choice for every job

The Ledinaire waterpprof (WT060) range contains a selection of popular off-the-shelf waterproof LED luminaires that comes with the high Philips quality levels at a competitive price. Reliable, energy efficient and affordable. Ledinaire enables, simple and quick installation, with optional through wiring possibility.

Benefits

- Philips quality and reliability
- Energy saving
- Diffuse comfortable light
- Easy installation, through external push in connector

Applications

- Covered car parks
- Industrial halls (up to 4 m in height)
- Storage rooms

Features

- Robust (IK08) and waterproof (IP66) luminaire
- Multiple lengths and light levels available
- Mounting bracket can be positioned over full length of luminaire

Versions



Ledinaire Waterproof



Ledinaire Waterproof WT060C



Ledinaire Waterproof

Dimensional drawing

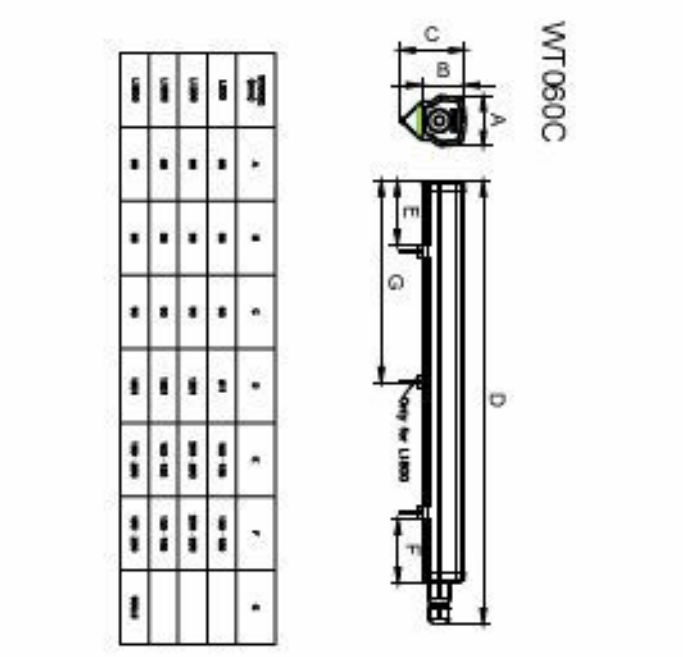

840 neutral white - Power supply unit

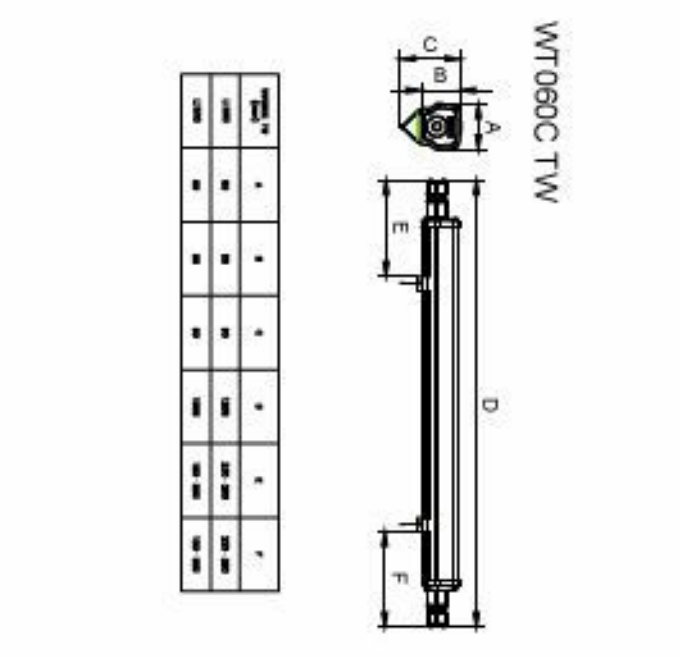

840 neutral white - Power supply unit

Product details

Ledinaire waterproof, WT060C

Ledinaire waterproof, WT060C

Ledinaire waterproof, WT060C

Ledinaire waterproof, WT060C

Ledinaire waterproof, WT060C

Ledinaire waterproof, WT060C

General Information

Light source replaceable	No
Number of gear units	1 unit
Driver included	Yes
Service tag	No

Light Technical

Color rendering index (CRI)	>80
Beam angle of light source	120 degree(s)
Optic type	Symmetrical

Operating and Electrical

Input Voltage	220 to 240 V
Line Frequency	50 or 60 Hz
Suitable for random switching	Yes
Protection class IEC	Safety class II

Controls and Dimming

Dimmable	No
Maximum dim level	Not applicable

Mechanical and Housing

Housing Color	Grey
Ingress protection code	IP66 [Dust penetration-protected, jet-proof]
Mech. impact protection code	IK08 [5 J vandal-protected]

Approval and Application

Glow-wire test	Temperature 850 °C, duration 30 s
Flammability mark	For mounting on normally flammable surfaces
CE mark	Yes
ENEC mark	-
Flickering value (PstLM) - Flickering value as per EN 61000-3-3	1
Stroboscopic effect visibility measure (SVM)	1.6
Ambient temperature range	-20 to +45 °C

Initial Performance (IEC Compliant)

Luminous flux tolerance	+/-10%
Initial chromaticity	<5

Light Technical

Order Code	Full Product Name	Luminous Flux	Correlated Color Temperature (Nom)	Luminous Efficacy (rated) (Nom)
911401876680	WT060C LED36S/840 PSU L1200 BN	3,600 lm	4000 K	120 lm/W
911401876780	WT060C LED36S/840 PSU TW1 L1200 BN	3,600 lm	4000 K	120 lm/W
911401877280	WT060C LED36S/865 PSU L1200 BN	3,600 lm	6500 K	120 lm/W
911401892780	WT060C LED25S/840 PSU L1200 BN	2,500 lm	4000 K	125 lm/W
911401892880	WT060C LED25S/840 PSU TW1 L1200 BN	2,500 lm	4000 K	125 lm/W
911401876880	WT060C LED56S/840 PSU L1500 BN	5,600 lm	4000 K	121 lm/W
911401876980	WT060C LED56S/840 PSU TW1 L1500 BN	5,600 lm	4000 K	121 lm/W
911401877480	WT060C LED56S/865 PSU L1500 BN	5,600 lm	6500 K	121 lm/W
911401892980	WT060C LED34S/840 PSU L1500 BN	3,400 lm	4000 K	121 lm/W
911401893080	WT060C LED34S/840 PSU TW1 L1500 BN	3,400 lm	4000 K	121 lm/W
911401893180	WT060C LED80S/840 PSU L1800 BN	8,000 lm	4000 K	123 lm/W
911401876480	WT060C LED18S/840 PSU L600 BN	1,800 lm	4000 K	120 lm/W

Operating and Electrical

Order Code	Full Product Name	Power Consumption
911401876680	WT060C LED36S/840 PSU L1200 BN	30 W
911401876780	WT060C LED36S/840 PSU TW1 L1200 BN	30 W
911401877280	WT060C LED36S/865 PSU L1200 BN	30 W
911401892780	WT060C LED25S/840 PSU L1200 BN	20 W
911401892880	WT060C LED25S/840 PSU TW1 L1200 BN	20 W
911401876880	WT060C LED56S/840 PSU L1500 BN	46 W
911401876980	WT060C LED56S/840 PSU TW1 L1500 BN	46 W
911401877480	WT060C LED56S/865 PSU L1500 BN	46 W
911401892980	WT060C LED34S/840 PSU L1500 BN	28 W
911401893080	WT060C LED34S/840 PSU TW1 L1500 BN	28 W
911401893180	WT060C LED80S/840 PSU L1800 BN	65 W
911401876480	WT060C LED18S/840 PSU L600 BN	15 W

© 2026 Signify Holding. All rights reserved. The information provided herein is subject to change, without notice. Signify does not give any representation or warranty as to the accuracy or completeness of the information included herein and shall not be liable for any action in reliance thereon. The information presented in this document is not intended as any commercial offer and does not form part of any quotation or contract, unless otherwise agreed by Signify. Philips and the Philips Shield Emblem are registered trademarks of Koninklijke Philips N.V.