PHILIPS

TC KT S 20S/830 PSE WH401 T102

912500100343



DRUM, Surface-mounted, 3D printed, 16.5 W, D218 mm, 2181 lm, 3000 K, High-gloss reflector, IP20, EL-DC

Surface-mounted, D218 mm, Polycarbonate, White, Surface, Power supply unit, DC compatible for central emergency lighting, 2181 lm, 16.5 W, 132 lm/W, 3000 K, (0.43, 0.40) SDCM < 5, Beam angle 90°, High-gloss reflector, IP20 | Finger-protected, IK02 | 0.2 J standard, Safety class II, 2 Push-in connector 2-pole, Feed-through wiring 1-phase, DC operated central emergency lighting

General Information

Number of gear units	1 unit
Driver included	Yes
Sustainability rating	Unclassified
Service tag	Yes
Value ladder	Specification
Warranty period	5 years

Light Technical

Luminous Flux	2,181 lm
Correlated Color Temperature (Nom)	3000 K
Luminous Efficacy (rated) (Nom)	132 lm/W
Color rendering index (CRI)	>80
Beam angle of light source	90 degree(s)
Light source color	830 warm white
Optic type	Beam angle 90°
Luminaire light beam spread	90°
Unified glare rating CEN	22

Operating and Electrical

Input Voltage	220/240 V
Line Frequency	50 to 60 Hz
Inrush current	15.8 A
Inrush time	0.22 ms
Power Consumption	16.5 W
Power Factor (Fraction)	0.9
Connection	2 Push-in connector 2-pole
Cable	-
Number of products on MCB of 16 A type B	35
Suitable for random switching	Yes
Protection class IEC	Safety class II
Feed-through wiring	Feed-through wiring 1-phase
Total harmonic distortion	9 %

Controls and Dimming

Dimmable	No
Driver/power unit/transformer	Power supply unit, DC compatible for central emergency lighting
Constant light output	No
Embedded control	-

Mechanical and Housing

Housing Material	Polycarbonate
Reflector material	Polycarbonate aluminum coated
Optic material	Aluminum and polycarbonate
Optical cover material	-
Fixation material	-
Housing Color	White
Optical cover finish	-
Reflector Finish	High-gloss reflector
Overall height	157 mm
Overall diameter	218 mm
Ingress protection code	IP20 [Finger-protected]
Mech. impact protection code	IK02 [0.2 J standard]
Mounting	Surface
Net Weight (Piece)	1.300 kg

Emergency Operation

Central Emergency	Yes
Emergency lighting	DC operated central emergency lighting
Emergency lighting operation mode	Maintained

Approval and Application

Glow-wire test	Temperature 750 °C, duration 30 s
Flammability mark	-
CE mark	Yes
ENEC mark	ENEC mark
EU RoHS compliant	Yes
Performance ambient temperature Tq	25 °C
Ambient temperature range	+10 to +40 °C

Initial Performance (IEC Compliant)

Luminous flux tolerance	-10% / +10%
Initial chromaticity	(0.43, 0.40) SDCM < 5
Power consumption tolerance	+/-10%

Over Time Performance (IEC Compliant)

Control gear failure rate at median useful life 50000 h	10 %
Lumen maintenance (EN-IEC 62722-2-1) at median useful life* 50000 h	L90
Lumen maintenance (EN-IEC 62722-2-1) at median useful life* 100000 h	L90

Sustainability Data

Repair class	Repair Class D, this product is not designed to be repaired.
Embedded carbon (A1-A3)	26.3 kg CO_2e
Product non-virgin material ratio	11.8 %
Recyclable content ratio of the finished product	49.7 %
GWP total B6 (kg CO2eq) Declared Unit	Please calculate using your local energy mix value: Power Declared Unit (kW) * Service life (hrs) Declared Unit * Energy mix (kg CO2eq / kwh)
GWP total B6 (kg CO2eq) Functional Unit	Please calculate using your local energy mix value: Power Declared Unit (kW) * 1000 (lm) /lumen output (lm) Declared Unit * 35000 (hrs) * Energy mix (kg CO2 eq / kwh)
Non-virgin material ratio of the packaging	Cardboard > 80% recycled
Packaging Recyclable content ratio	Cardboard recycling rate > 80%
Packaging Material	Cardboard

Dimensional drawing

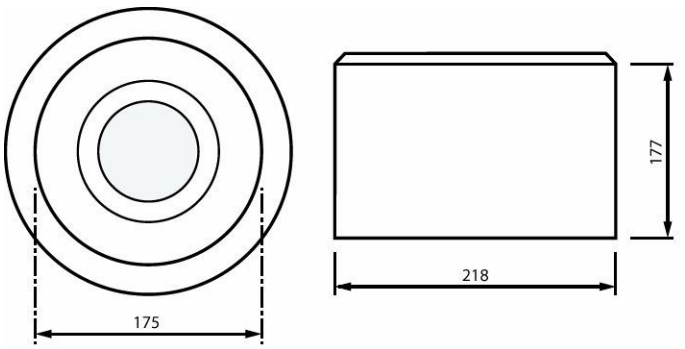

Product Data

Order product name	TC KT S 20S/830 PSE WH401 T102
Full product name	TC KT S 20S/830 PSE WH401 T102
Full product code	871869606849600
Order code	912500100343
Material Nr. (12NC)	912500100343
Numerator - Quantity Per Pack	1
EAN/UPC - Product/Case	8718696068496
Numerator - Packs per outer box	1
EAN/UPC - Case	8718696068496
Product family code	TCKTT [Drum]

Related Documents

Documents and certificates	Document Name	Download
Installation Instructions	Drum-surface-mounted-installation-instructions.pdf	Download

Photometry and lighting design	Document Name	Download
IES File	TCKT-S-20S-830-UGR22-PSU.ies	Download

© 2026 Signify Holding. All rights reserved. The information provided herein is subject to change, without notice. Signify does not give any representation or warranty as to the accuracy or completeness of the information included herein and shall not be liable for any action in reliance thereon. The information presented in this document is not intended as any commercial offer and does not form part of any quotation or contract, unless otherwise agreed by Signify. Philips and the Philips Shield Emblem are registered trademarks of Koninklijke Philips N.V.