PHILIPS

BY712P LED250S 5700 NB H PSU

919515816965



Efficiency at its Finest, Maximize Savings

In today's world, lighting a bright path forward means considering the environment too. Reducing a company's carbon footprint isn't just a feel-good initiative, it's a smart business move. Sustainable lighting solutions not only conserve energy and lower operating costs, but also showcase your commitment to a greener future. Let's illuminate how our innovative high-bay luminaires can help you achieve both brilliance and environmental responsibility. The GreenPerform EliteX is the Best-in-Class Highbay solution designed to deliver the excellent energy efficiency and superior optics suited to provide an unmatched highbay solution for a wide range of applications like warehousing, manufacturing, other industrial applications, atriums, airport concourse, sports halls, etc . Offering excellent beam and Glare control , this highbay offers an unmatched lighting experience. Driven by performance delivered through Superior Optics , higher Efficiency and long useful life optimizing overall cost of the project .

General Information

Driver included	Yes
Light source engine type	LED
Warranty period	1 years

Light Technical

Luminous Flux	25,000 lm
Correlated Color Temperature (Nom)	5700 K
Luminous Efficacy (rated) (Nom)	180 lm/W
Color rendering index (CRI)	≥70
Beam angle of light source	60 degree(s)
Light source color	757 cool white

Optic type	-
Luminaire light beam spread	60°

Operating and Electrical

Input Voltage	140-270 V
Line Frequency	50 Hz
Power Consumption	140 W
Power Factor (Fraction)	0.95
Protection class IEC	Safety class I
Surge Protection (Common/ Differential)	6/6 kV kV

Mechanical and Housing

Housing Material	Aluminium pressure die cast
Optic material	Polycarbonate
Optical cover material	Polycarbonate
Housing Color	Aluminum and gray
Mounting device	Eye-Bolt
Material	Pressure die cast aluminum
Ingress protection code	IP65 [Dust penetration-protected, jet-proof]
Mech. impact protection code	IK08 [5 J vandal-protected]

Dimensional drawing

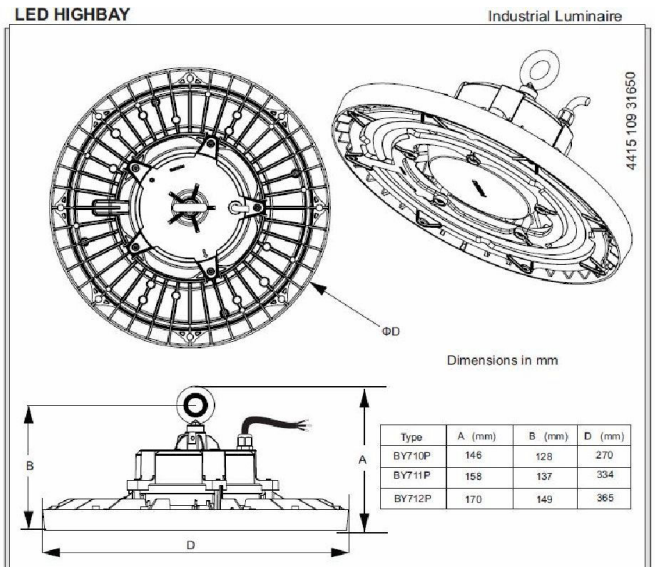

Optical cover type	Micro-lens optic in polycarbonate cover
Net Weight (Piece)	3.200 kg

Approval and Application

Flammability mark	For mounting on normally flammable surfaces
Ambient temperature range	0 to +45 °C

Initial Performance (IEC Compliant)

Power consumption tolerance	+/-10%

Over Time Performance (IEC Compliant)

Median useful life L70B50	100,000 hour(s)

Product Data

Order product name	BY712P LED250S 5700 NB H PSU
Full product name	BY712P LED250S 5700 NB H PSU
Order code	919515816965
Material Nr. (12NC)	919515816965
Numerator - Quantity Per Pack	1
Numerator - Packs per outer box	2

Related Documents

Documents and certificates	Document Name	Download
Installation Instructions	GreenPerformEliteX-BY710-711-712-INI.pdf	Download

© 2026 Signify Holding. All rights reserved. The information provided herein is subject to change, without notice. Signify does not give any representation or warranty as to the accuracy or completeness of the information included herein and shall not be liable for any action in reliance thereon. The information presented in this document is not intended as any commercial offer and does not form part of any quotation or contract, unless otherwise agreed by Signify. Philips and the Philips Shield Emblem are registered trademarks of Koninklijke Philips N.V.