PHILIPS

BN005C LED11/CW L500 PSU LA

911401828287

Essential Smartbright Wide Batten BN005C, 11.5 W, 1100 lm, 6500 K, Symmetrical

Philips Essential smartbright wide batten offers exceptional value. It is Perfect for your everyday lighting installations. Available in 2 standard sizes, it has option of 3 CCTs to suit different requirements.

General Information

Number of gear units	1 unit
Gear	EB [Electronic]
Driver included	Yes
Light source engine type	LED
Value ladder	Value
Warranty period	2 years

Light Technical

Luminous Flux	1,100 lm
Correlated Color Temperature (Nom)	6500 K
Luminous Efficacy (rated) (Nom)	95 lm/W
Color rendering index (CRI)	≥70
Number of light sources	1
Beam angle of light source	115 degree(s)
Light source color	765 cool daylight
Optic type	Symmetrical
Luminaire light beam spread	115°
Unified glare rating CEN	Not applicable
Effective projected area	0.75 m^2

Operating and Electrical

Input Voltage	120/240 V
Line Frequency	50 or 60 Hz
Inrush current	23 A
Inrush time	0.004 ms
Power Consumption	11.5 W
Power Factor (Fraction)	0.9
Connection	-
Cable	Cable 0.2 m without plug

Number of products on MCB of 16 A type B	64
Suitable for random switching	No
Protection class IEC	Safety class II

Controls and Dimming

Dimmable	-
Control interface	-
Maximum dim level	Not applicable

Mechanical and Housing

Housing Material	Polycarbonate
Reflector material	-
Optic material	Polycarbonate
Optical cover material	Polycarbonate
Housing Color	White
Mounting device	Mounting bracket
Optical cover finish	-
Overall length	500 mm
Overall width	70 mm
Overall height	26 mm
Dimensions (Height x Width x Depth)	26 x 70 x 500 mm
Ingress protection code	IP20 [Finger-protected]
Mech. impact protection code	IK02 [0.2 J standard]
Optical cover type	Opal
Net Weight (Piece)	0.120 kg

Approval and Application

Glow-wire test	Temperature 650 °C, duration 30 s
Flammability mark	For mounting on normally flammable surfaces
CE mark	No
ENEC mark	-
Photobiological risk	Photobiological risk group 1 @200mm to EN62778
Photobiological risk specification	0.2 m
EU RoHS compliant	Yes
Performance ambient temperature Tq	25 °C
Ambient temperature range	-20 to +40 °C

Initial Performance (IEC Compliant)

Luminous flux tolerance	-10% / +10%
Initial chromaticity	(0.31, 0.34) SDCM≤7
Power consumption tolerance	+/-10%

Product Data

Order product name	BN005C LED11/CW L500 PSU LA
Full product name	BN005C LED11/CW L500 PSU LA
Full product code	872016976071499
Order code	911401828287
Material Nr. (12NC)	911401828287
Numerator - Quantity Per Pack	1
EAN/UPC - Product/Case	8720169760714
Numerator - Packs per outer box	50
EAN/UPC - Case	8720169760912

Dimensional drawing

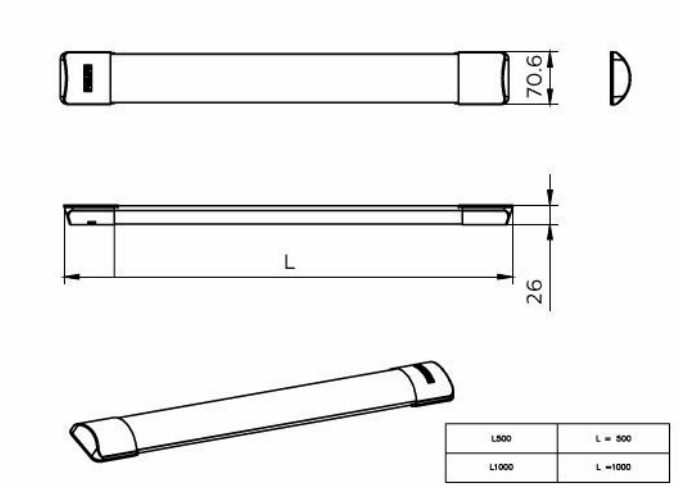

Related Documents

Documents and certificates	Document Name	Download
Installation Instructions	ESB-BN005C-LA.pdf	Download

Photometry and lighting design	Document Name	Download
IES File	BN005C-LED11-CW-L500-PSU-LA.ies	Download

© 2026 Signify Holding. All rights reserved. The information provided herein is subject to change, without notice. Signify does not give any representation or warranty as to the accuracy or completeness of the information included herein and shall not be liable for any action in reliance thereon. The information presented in this document is not intended as any commercial offer and does not form part of any quotation or contract, unless otherwise agreed by Signify. Philips and the Philips Shield Emblem are registered trademarks of Koninklijke Philips N.V.