PHILIPS

Reflector Infrared BR40,PAR38

I_RIFB40



Incandescent Infrared Reflector Flood

Philips Family of Specialty Incandescents provide the perfect light for dramatic accents and display lighting as well as general lighting in a variety of applications. Philips Infrared lamps are suited for heating and drying in industrial and commercial aplications. These incandescent, gas-filled infrared heat lamps come up to full temperature almost immediately, eliminating costly warm-up time. Highly efficient heat generators that produce a minimum of light rays and a high amount of infrared radiation. The BR40 lamp provides a built-in reflector for radiant energy control.

Benefits

- No warm-up time required.
- Decreased heat loss.

Applications

- Ideal for bathroom recessed fixtures and commercial and industrial applications.

Features

- Instantaneous heat
- Radiated heat only warms object to be heated

- Build-in reflector for radiant energy control

Versions



LPPR IRPR38 0001



PAR38 IR E27 Red

Dimensional drawing

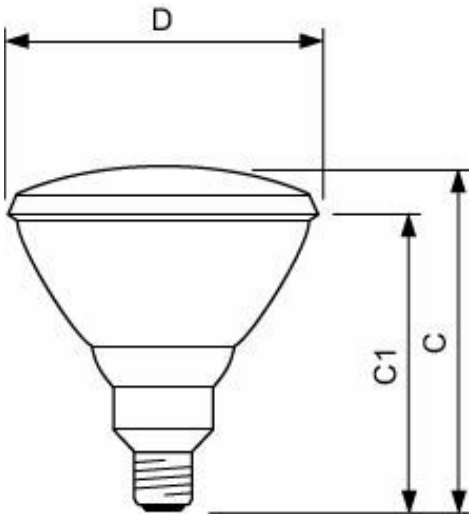

Product	D	C (max)	C1 (max)
175PAR38/HEAT/CL 120V 12/1	121 mm	135 mm	123 mm
IR175R/PAR 120V 12/1	121 mm	135 mm	123 mm
Par38 115-125V E26 1CT/12	121 mm	135 mm	123 mm

General Information

Nominal lifetime	5,000 hour(s)
Rated Lifetime (Hours)	5,000 hour(s)

Operating and Electrical

Power Consumption	175 W
Wattage Equivalent	175 W
Voltage (Nom)	115-125 V

Controls and Dimming

Dimmable	Yes

Mechanical and Housing

Bulb Material	Hard Glass
Bulb Shape	PAR38

General Information

Order Code	Full Product Name	Cap-Base	Operating Position
923813534608	175PAR38/HEAT/CL 120V 12/1	E26/50X39	UNIVERSAL
923813534612	Par38 115-125V E26 1CT/12	E26/50X39	UNIVERSAL
923813634608	IR175R/PAR 120V 12/1	E26	H45

Light Technical

Order Code	Full Product Name	Color Designation
923813534608	175PAR38/HEAT/CL 120V 12/1	C
923813534612	Par38 115-125V E26 1CT/12	C
923813634608	IR175R/PAR 120V 12/1	R

Mechanical and Housing

Order Code	Full Product Name	Bulb Finish
923813534608	175PAR38/HEAT/CL 120V 12/1	Clear
923813534612	Par38 115-125V E26 1CT/12	Clear
923813634608	IR175R/PAR 120V 12/1	Red

© 2026 Signify Holding. All rights reserved. The information provided herein is subject to change, without notice. Signify does not give any representation or warranty as to the accuracy or completeness of the information included herein and shall not be liable for any action in reliance thereon. The information presented in this document is not intended as any commercial offer and does not form part of any quotation or contract, unless otherwise agreed by Signify. Philips and the Philips Shield Emblem are registered trademarks of Koninklijke Philips N.V.