PHILIPS

SmartBright LED Downlight DN016

9182273

Trusted performance.

Providing robust & reliable performance. Bright Light with uniform distribution.

Benefits

- Reliable Performance
- Uniform light distribution
- Internal Driver

Features

- Cut-out solution from D90~D125
- Providing both DIM & non-dim application
- 30K hr lifetime

Applications

- Hospitality
- Offices
- Residential

Versions



Downlight DN016B RD ND



Downlight DN016B D125 RD DIM

Dimensional drawing

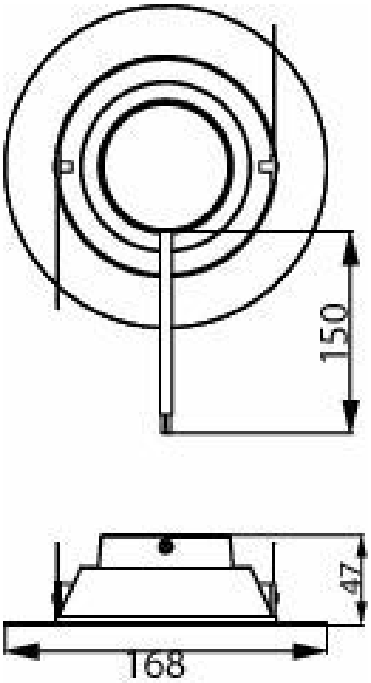

DN016B LED12/CW 15W 100-240V D125 RD ND

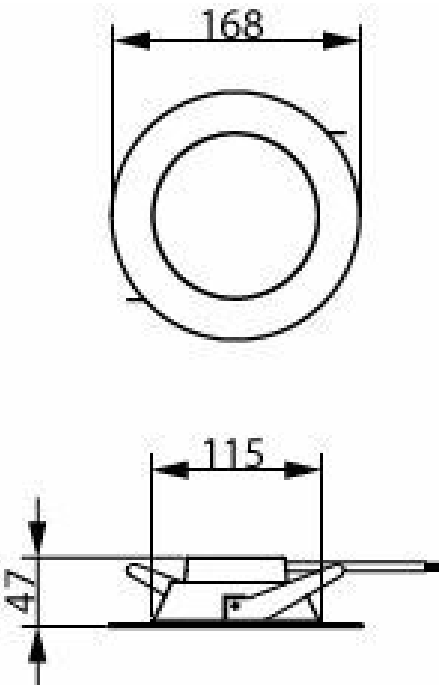

DN016B LED20/NW 20W 100-240V D125 RD ND

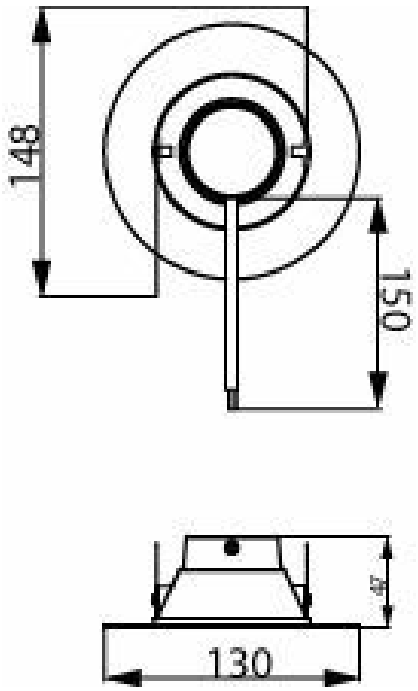

DN016B LED8/NW 10W 100-240V D90 RD ND

General Information

Light source replaceable	No
Number of gear units	1 unit
Driver included	Yes

Light Technical

Color rendering index (CRI)	80
Optic type	Wide beam

Operating and Electrical

Suitable for random switching	Not applicable
Protection class IEC	Safety class I

Mechanical and Housing

Housing Color	White
Ingress protection code	IP20 [Finger-protected]
Mech. impact protection code	IK03 [0.3 J]

Approval and Application

Glow-wire test	Temperature 650 °C, duration 30 s
Flammability mark	For mounting on normally flammable surfaces
Ambient temperature range	-20 to +40 °C

Initial Performance (IEC Compliant)

Luminous flux tolerance	+/-10%

Over Time Performance (IEC Compliant)

Driver failure rate at 5000 h	0.012 %

Light Technical

Order Code	Full Product Name	Luminous Flux	Correlated Color Temperature (Nom)	Luminous Efficacy (rated) (Nom)
929002067212	DN016B LED8/WW 10W 100-240V D90 RD ND	800 lm	3000 K	80.00 lm/W
929002067312	DN016B LED8/NW 10W 100-240V D90 RD ND	800 lm	4000 K	80.00 lm/W
929002067412	DN016B LED8/CW 10W 100-240V D90 RD ND	800 lm	6500 K	80.00 lm/W
929002067512	DN016B LED12/WW 15W 100-240V D125 RD ND	1,200 lm	3000 K	80.00 lm/W
929002067612	DN016B LED12/NW 15W 100-240V D125 RD ND	1,200 lm	4000 K	80.00 lm/W
929002067712	DN016B LED12/CW 15W 100-240V D125 RD ND	1,200 lm	6500 K	80.00 lm/W
929002334612	DN016B LED12/WW 15W 127V D125 RD DIM	1,200 lm	3000 K	80 lm/W
929002334712	DN016B LED12/NW 15W 127V D125 RD DIM	1,200 lm	4000 K	80 lm/W
929002334812	DN016B LED12/CW 15W 127V D125 RD DIM	1,200 lm	6500 K	80 lm/W
929002374812	DN016B LED20/WW 20W 100-240V D125 RD ND	2,000 lm	3000 K	100 lm/W
929002374912	DN016B LED20/NW 20W 100-240V D125 RD ND	2,000 lm	4000 K	100 lm/W
929002375012	DN016B LED20/CW 20W 100-240V D125 RD ND	2,000 lm	6500 K	100 lm/W

Operating and Electrical

Order Code	Full Product Name	Input Voltage	Line Frequency	Power Consumption
929002067212	DN016B LED8/WW 10W 100-240V D90 RD ND	100 to 240 V	50 or 60 Hz	10 W
929002067312	DN016B LED8/NW 10W 100-240V D90 RD ND	100 to 240 V	50 or 60 Hz	10 W
929002067412	DN016B LED8/CW 10W 100-240V D90 RD ND	100 to 240 V	50 or 60 Hz	10 W
929002067512	DN016B LED12/WW 15W 100-240V D125 RD ND	100 to 240 V	50 or 60 Hz	15 W
929002067612	DN016B LED12/NW 15W 100-240V D125 RD ND	100 to 240 V	50 or 60 Hz	15 W
929002067712	DN016B LED12/CW 15W 100-240V D125 RD ND	100 to 240 V	50 or 60 Hz	15 W
929002334612	DN016B LED12/WW 15W 127V D125 RD DIM	127 V	60 Hz	15 W
929002334712	DN016B LED12/NW 15W 127V D125 RD DIM	127 V	60 Hz	15 W
929002334812	DN016B LED12/CW 15W 127V D125 RD DIM	127 V	60 Hz	15 W
929002374812	DN016B LED20/WW 20W 100-240V D125 RD ND	100 to 240 V	50 or 60 Hz	20 W
929002374912	DN016B LED20/NW 20W 100-240V D125 RD ND	100 to 240 V	50 or 60 Hz	20 W
929002375012	DN016B LED20/CW 20W 100-240V D125 RD ND	100 to 240 V	50 or 60 Hz	20 W

Controls and Dimming

Order Code	Full Product Name	Dimmable	Maximum dim level
929002067212	DN016B LED8/WW 10W 100-240V D90 RD ND	No	-
929002067312	DN016B LED8/NW 10W 100-240V D90 RD ND	No	-
929002067412	DN016B LED8/CW 10W 100-240V D90 RD ND	No	-
929002067512	DN016B LED12/WW 15W 100-240V D125 RD ND	No	-
929002067612	DN016B LED12/NW 15W 100-240V D125 RD ND	No	-
929002067712	DN016B LED12/CW 15W 100-240V D125 RD ND	No	-
929002334612	DN016B LED12/WW 15W 127V D125 RD DIM	Yes	10%
929002334712	DN016B LED12/NW 15W 127V D125 RD DIM	Yes	10%
929002334812	DN016B LED12/CW 15W 127V D125 RD DIM	Yes	10%
929002374812	DN016B LED20/WW 20W 100-240V D125 RD ND	No	Not applicable
929002374912	DN016B LED20/NW 20W 100-240V D125 RD ND	No	Not applicable
929002375012	DN016B LED20/CW 20W 100-240V D125 RD ND	No	Not applicable

Initial Performance (IEC Compliant)

Order Code	Full Product Name	Initial chromaticity
929002067212	DN016B LED8/WW 10W 100-240V D90 RD ND	(0.440, 0.4030) 6SDCM
929002067312	DN016B LED8/NW 10W 100-240V D90 RD ND	(0.3818, 0.3797) 6SDCM
929002067412	DN016B LED8/CW 10W 100-240V D90 RD ND	(0.3130, 0.3370) 6SDCM
929002067512	DN016B LED12/WW 15W 100-240V D125 RD ND	(0.440, 0.4030) 6SDCM
929002067612	DN016B LED12/NW 15W 100-240V D125 RD ND	(0.3818, 0.3797) 6SDCM
929002067712	DN016B LED12/CW 15W 100-240V D125 RD ND	(0.3130, 0.3370) 6SDCM
929002334612	DN016B LED12/WW 15W 127V D125 RD DIM	(0.440, 0.4030) 6SDCM
929002334712	DN016B LED12/NW 15W 127V D125 RD DIM	(0.3818, 0.3797) 6SDCM
929002334812	DN016B LED12/CW 15W 127V D125 RD DIM	(0.3130, 0.3370) 6SDCM
929002374812	DN016B LED20/WW 20W 100-240V D125 RD ND	(0.440, 0.4030) 6SDCM
929002374912	DN016B LED20/NW 20W 100-240V D125 RD ND	(0.3818, 0.3797) 6SDCM
929002375012	DN016B LED20/CW 20W 100-240V D125 RD ND	(0.3130, 0.3370) 6SDCM

© 2026 Signify Holding. All rights reserved. The information provided herein is subject to change, without notice. Signify does not give any representation or warranty as to the accuracy or completeness of the information included herein and shall not be liable for any action in reliance thereon. The information presented in this document is not intended as any commercial offer and does not form part of any quotation or contract, unless otherwise agreed by Signify. Philips and the Philips Shield Emblem are registered trademarks of Koninklijke Philips N.V.