Signify myCreation

DL V1T TL E27 OT204BZ410 AT204BZ410 FEU

912500109504



Voila - Table Lamp in different colors

Looking for a stylish table lamp that is not only functional but also adds a touch of modernity to your space? Look no further than the Design Award winning Voila Table Lamp. With this lamp, our designers reimagined the classic table lamp. The design has a familiar iconic silhouette with innovative textures on the surface giving it a distinctive look and feel and making each lamp in this family special.

General Information

Warranty period	5 years

Operating and Electrical

Input Voltage	220 to 240 V
Line Frequency	50 to 60 Hz
Protection class IEC	Safety class II

Mechanical and Housing

Housing Material	3D printed, BZ410 Satin Bronze
Housing Color	Bronze
Overall length	215 mm
Overall width	215 mm
Overall height	301 mm
Overall diameter	215 mm

Dimensions (Height x Width x Depth)	301 x 215 x 215 mm
Nominal Ceiling cut-out diameter	215 mm
Nominal ceiling cut-out length	215 mm
Nominal ceiling cut-out width	215 mm
Ingress protection code	IP20 [Finger-protected]
Mech. impact protection code	IK02 [0.2 J standard]
Net Weight (Piece)	0.548 kg
Cable color	transparent

Approval and Application

Glow-wire test	Temperature 650 °C, duration 30 s
CE mark	Yes
EU RoHS compliant	No

Dimensional drawing

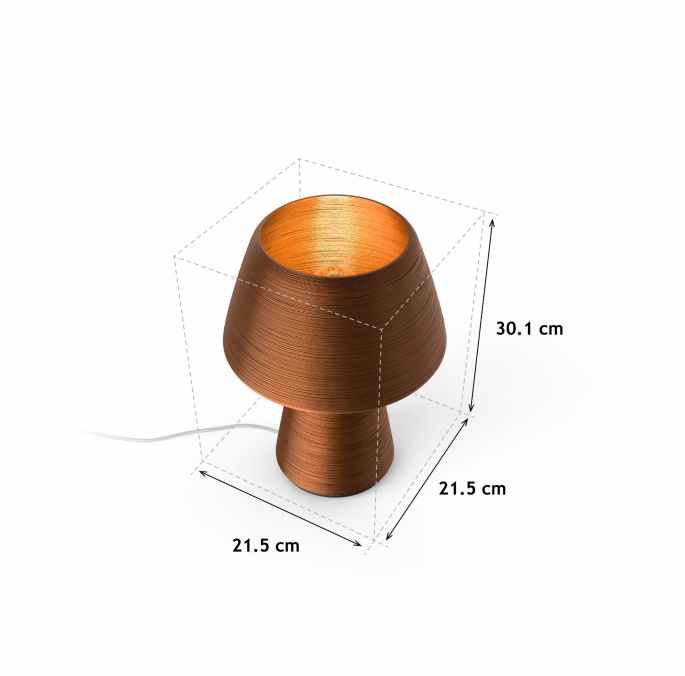

Product Data

Order product name	DL V1T TL E27 OT204BZ410 AT204BZ410 FEU
Full product name	DL V1T TL E27 OT204BZ410 AT204BZ410 FEU
Full product code	872016987189200
Order code	912500109504
Material Nr. (12NC)	912500109504
Numerator - Quantity Per Pack	1
EAN/UPC - Product/Case	8720169871892
Numerator - Packs per outer box	1
EAN/UPC - Case	8720169871892

Related Documents

Documents and certificates	Document Name	Download
Installation Instructions	442294861323-MyCreation-general-table-light.pdf	Download

© 2026 Signify Holding. All rights reserved. The information provided herein is subject to change, without notice. Signify does not give any representation or warranty as to the accuracy or completeness of the information included herein and shall not be liable for any action in reliance thereon. The information presented in this document is not intended as any commercial offer and does not form part of any quotation or contract, unless otherwise agreed by Signify. All trademarks are owned by Signify Holding or their respective owners.