PHILIPS

EM264C SM TWIN SPOT 8S NM3 ELD IP65

912401483619



Emergency Twin Spot DALI, Surface-mounted, 5 W, 7.4 W, 5 W, 292x381mm; H70, 780 lm, 5000 K, IP44, ELD3h, Non-maintained

Surface-mounted, 292x381mm; H70, Polycarbonate, White, Signal white (RAL9003), Ceiling, Wall, 780 lm, 5 W, 105 lm/W, 5000 K, (0.346, 0.356) SDCM<5, CRI70, Clear, UV stabilized Polycarbonate cover, IP44 | Wire-protected, splash-proof, IK03 | 0.3 J, Safety class II, Push-in connector 4-pole, TP(a) diffuser flammability class, Emergency lighting 3 hours duration with DALI interface

Warnings and Safety

- The battery is designed with a rated average battery design life of 50,000 hours in standby mode. The battery is supported with a standard 5year warranty; conditional of the product being maintained and operated in accordance with the manufacturer's guidelines and tested in accordance with EN50272

General Information

Number of gear units	1 unit
Driver included	Yes
Sustainability rating	Unclassified
Service tag	No
Value ladder	Performance
Warranty period	5 years

Light Technical

Luminous Flux	780 lm
Saturated Red (R9)	<50
Correlated Color Temperature (Nom)	5000 K
Luminous Efficacy (rated) (Nom)	105 lm/W
Color rendering index (CRI)	≥70
Light source color	750 neutral white
Optic type	-
Luminaire light beam spread	235°
Unified glare rating CEN	Not applicable

Operating and Electrical

Input Voltage	220-240 V
Line Frequency	50 Hz
Inrush current	12.8 A
Inrush time	0.192 ms
Power Consumption	5 W
Power Factor (Fraction)	0.29
Connection	Push-in connector 4-pole
Cable	-
Number of products on MCB of 16 A type B	53
Suitable for random switching	Not applicable
Protection class IEC	Safety class II
Feed-through wiring	-

Wiring

Connector Type	Push

Controls and Dimming

Dimmable	No
Driver/power unit/transformer	-
Control interface	DALI
Constant light output	No
DALI Standard	DALI-2™
Maximum dim level	Not applicable
Photocell	-

Mechanical and Housing

Housing Material	Polycarbonate
Reflector material	-
Optic material	Polycarbonate
Optical cover material	UV stabilized Polycarbonate cover
Fixation material	-
Housing Color	White
Optical cover finish	Clear
Overall length	292 mm
Overall width	260 mm
Overall height	70 mm
Dimensions (Height x Width x Depth)	70 x 260 x 292 mm
Ingress protection code	IP44 [Wire-protected, splash-proof]
Mech. impact protection code	IK03 [0.3 J]
Explosion hazard class	-
Mounting	Ceiling
Net Weight (Piece)	1.480 kg

Emergency Operation

Emergency flux	780 lm
Power consumption during Central DC emergency mode	7.4 W
Rated duration of the emergency lighting (when fully charged)	3 hour(s)
Additional max. power consumption when emergency battery is charging	5 W
Central Emergency	No
Type of emergency lighting battery	Lithium
Emergency lighting	Emergency lighting 3 hours duration with DALI interface
Emergency function testing method	Programmed automatic self testing via DALI or wireless lighting control system
Emergency lighting operation mode	Non-maintained

Approval and Application

Glow-wire test	Temperature 850 °C, duration 30 s
Flammability mark	-
CE mark	Yes
ENEC mark	-
Photobiological risk	Photobiological risk group 0 @ 200mm to EN62471
EU RoHS compliant	Yes
Diffuser Flammability Class	TP(a) diffuser flammability class
Performance ambient temperature Tq	25 °C
Flickering value (PstLM) - Flickering value as per EN 61000-3-3	1
Stroboscopic effect visibility measure (SVM)	0.4
Ambient temperature range	0 to +55 °C

Initial Performance (IEC Compliant)

Luminous flux tolerance	+/-5%
Initial chromaticity	(0.346, 0.356) SDCM<5
Power consumption tolerance	+/-10%

Over Time Performance (IEC Compliant)

Control gear failure rate at median useful life 35000 h	5 %
Control gear failure rate at median useful life 50000 h	10 %
Control gear failure rate at median useful life 75000 h	25 %
Control gear failure rate at median useful life 100000 h	50 %
Lumen maintenance (EN-IEC 62722-2-1) at median useful life* 35000 h	L95
Lumen maintenance (EN-IEC 62722-2-1) at median useful life* 50000 h	L95
Lumen maintenance (EN-IEC 62722-2-1) at median useful life* 75000 h	L90
Lumen maintenance (EN-IEC 62722-2-1) at median useful life* 100000 h	L90

Sustainability Data

Repair class	Repair Class C, the driver of this luminaire can be replaced by a service technician. Special care is required during disassembly and reassembly, and specific tools may be required. Parts and documentation are available for a period of time.
Embedded carbon (A1-A3)	14.3 kg CO_2e
Product non-virgin material ratio	9.29 %
Recyclable content ratio of the finished product	24.7 %
GWP total B6 (kg CO2eq) Declared Unit	Please calculate using your local energy mix value: Power Declared Unit (kW) * Service life (hrs) Declared Unit * Energy mix (kg CO2eq / kwh)
GWP total B6 (kg CO2eq) Functional Unit	Please calculate using your local energy mix value: Power Declared Unit (kW) * 1000 (lm) /lumen output (lm) Declared Unit * 35000 (hrs) * Energy mix (kg CO2 eq / kwh)
Non-virgin material ratio of the packaging	Cardboard > 80% recycled
Packaging Recyclable content ratio	Cardboard recycling rate > 80%
Packaging Material	Cardboard

Product Data

Order product name	EM264C SM TWIN SPOT 8S NM3 ELD IP65
Full product name	EM264C SM TWIN SPOT 8S NM3 ELD IP65
Full product code	871951488040500
Order code	912401483619

Material Nr. (12NC)	912401483619
Numerator - Quantity Per Pack	1
EAN/UPC - Product/Case	8719514880405
Numerator - Packs per outer box	4
EAN/UPC - Case	8719514880221

Dimensional drawing

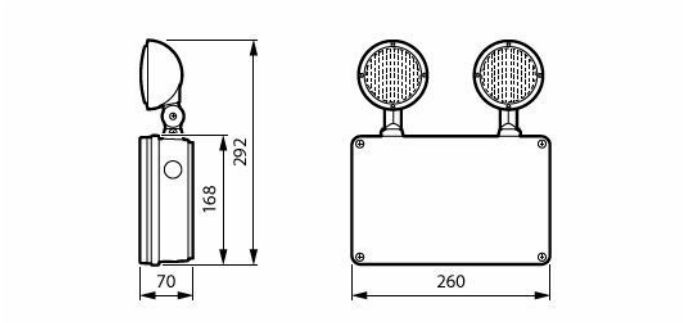

Related Documents

Documents and certificates	Document Name	Download
Installation Instructions	Emergency-TwinSpot-DALI-EM264C-INI.pdf	Download
Tender text	Tender_Text_912401483619_en_AA.txt	Download

Photometry and lighting design	Document Name	Download
IES File	EM264C-SM-TWIN-SPOT-8S-NM3-ELD-IP65-912401483619.ies	Download

© 2026 Signify Holding. All rights reserved. The information provided herein is subject to change, without notice. Signify does not give any representation or warranty as to the accuracy or completeness of the information included herein and shall not be liable for any action in reliance thereon. The information presented in this document is not intended as any commercial offer and does not form part of any quotation or contract, unless otherwise agreed by Signify. Philips and the Philips Shield Emblem are registered trademarks of Koninklijke Philips N.V.