PHILIPS

Fortimo

LED system

DLM Flex Gen2



Design-in Guide

A **new generation solution** for downlight applications

March 2023

Contents

Introduction to this guide 3
Determine which documents contain what information 3

Warnings and instructions 4
Design-in phase 4
Manufacturing phase 4
Installation and service for luminaires incorporating the Fortimo LED DLM Gen2 System 4
Philips Design-in support 4
System Disposal 4

Introduction to Philips Fortimo DLM Flex Gen2 5
Fortimo DLM Flex Gen2 5
Applications 5
Fortimo LED DLM (downlight module) Flex Gen2 5
Xitanium LED drivers for Fortimo LED DLM Flex Gen2 5

Optical design-in 7
Fortimo LED downlight modules address the issue of binning 7
Color consistency (SDCM) 7
Starting characteristics 7
Lumen maintenance 7
Secondary optics 8
Companies supplying reflectors for secondary optics 8

Mechanical design-in 9
About the Fortimo LED DLM Flex Gen2 module 9
Assembling the Module 9
Assembly of the DLM Flex Gen2 module 9
Mechanical fixation 9

Thermal design-in 10
Optimum performance 10
How to measure the critical temperature point Tc 10
Thermal Interface Material (TIM) 11
Passive cooling 12

Electrical design-in 13
Connecting the module 13
Tune the luminaire's flux (lm) and efficacy (lm/W) 13
Effect of Choosing a different current value 14
Set the output current via Rset 14
Programming the output current 18
Xitanium Indoor Spot and Downlight LED drivers 18
Xitanium Driver Operating window 19
To Select an Appropriate Driver 20
Compatible drivers 20
Wiring 21
Class I and Class II 21

Controllability 22
Introduction 22
DALI 22
Touch and Dim 24

Norms and Standards 25
Safety 25
Performance 25
Electromagnetic compatibility (tested with Fortimo LED DLM, cable and Xitanium LED driver) 25
Environmental 25
IEC recommendations 25

Contact details 28
Philips 28
Partners for cooling solutions 28
Partners for reflector solutions 28
Partners for thermal interface materials 28

Introduction to this guide



Fortimo DLM Flex Gen2

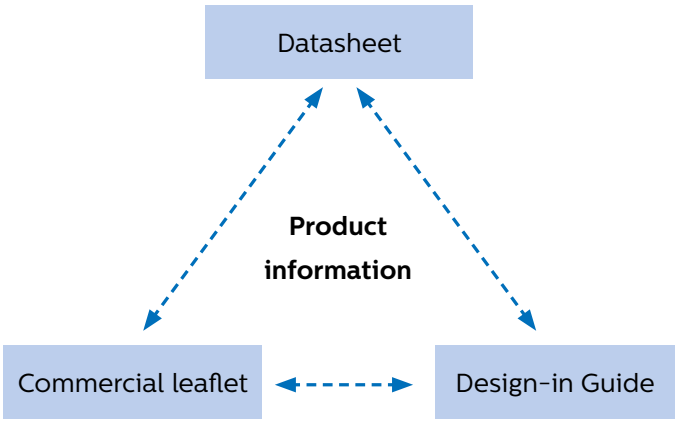

Thank you for choosing the Philips Fortimo LED downlight modules. In this guide you will find all the information you require to design a luminaire based on these modules. As LED technology is continuously improving, we advise you to visit our website: www.Philips.com/Technology for latest details.

More information or support

If you require any further information or support please consult your local Philips office. The Philips Design-in Team is also available to support you and you can contact them via your local Philips representative.

Determine which documents contain what information

In order to provide information in the best possible way, Philips' philosophy on product documentation is the following.

- **Commercial leaflet** contains product family information & system combinations (compatible Philips drivers and Rsets)
- **Datasheet** contains the module specification
- **Design-In Guide** describes how to design-in the products

All these documents can be found on the download page of the OEM website www.Philips.com/Technology. If you require any further information or support please consult your local Philips office.

Warnings and instructions

When using a driver, intended for these modules

Warning:

- The Philips Fortimo LED DLM Flex Gen2 modules must be operated with double isolated (SELV) drivers!
- Avoid touching the light emitting surface!

Safety warnings and installation instructions
To be taken into account during design-in and manufacturing.

Design-in phase

- Do not apply mains power to the module (Philips Fortimo LED DLM Flex Gen2) directly.
- Connect the modules and drivers before switching on mains.
- Provide adequate environmental protection.

Manufacturing phase

- Do not use products in case the LEDs are dislodged or if the housing is broken.
- Do not drop the LED DLM Flex Gen2 or damage in any way.
- Connect the modules and drivers before switching on mains.

Installation and service for luminaires incorporating the Fortimo LED DLM Gen2 System

- Do not service the luminaire when the mains voltage is connected; this includes connecting or disconnecting the LED DLM Gen2 module from the driver.

Philips Design-in support

Is available; please contact your Philips sales representative.

Fortimo LED DLM Flex Gen2 system disposal

Please inform yourself about the local waste disposal, separation and collection system for electrical and electronic products and packaging. Please act according to your local rules and do not dispose of your packaging and old product with your normal household waste. The correct disposal of your product will help prevent potential negative consequences for the environment and human health.

Introduction to Philips Fortimo DLM Flex Gen2



Fortimo DLM Flex Gen2

Fortimo DLM Flex Gen2 is the next generation range of products for the Philips downlight family. As with the previous generation, you can receive a downlight module as a L2 solution (only LED board) and choose amongst 2 different housings as an accessory. Both housings have the same footprint as the previous generations of Fortimo DLM. The difference lies in the height. The shallow housing allows for a smaller luminaire design. The high housing allows the user to maintain the previous luminaire design as the dimensions are exactly the same as the DLM gen5. With DLM Flex Gen2, you get the freedom and flexibility to choose your module dimensions and to be able to tune the current to suit your requirements.

Applications

As the name suggests, the Philips Fortimo LED downlight module (DLM) Gen2 is designed to be integrated into downlight luminaires for indoor use. OEMs may explore other applications and luminaires as long as there is no design conflict and compliance is ensured with luminaire standards, such as EN/IEC 62031.



Can the module be used in outdoor luminaires?

Neither the Fortimo LED module nor the driver has an IP classification. If these products are used in luminaires for outdoor applications, it is up to the OEM to ensure proper IP protection and approbation of the luminaire. Please consult us if you wish to deviate from the design rules described in this guide.

Fortimo LED DLM (downlight module) Flex Gen2

All DLM Flex Gen2 modules are built-in versions for integration into luminaires. This is applicable for the drivers too, except for Xitanium independent LED drivers that can be used remotely (independently) from the LED luminaire. The modules have interfaces for:

- cabling between LED module, driver and luminaire
- secondary optics via mounting options in the LED module housing and reflector rim
- heat sink design via heat spreader.

Naming of Fortimo DLM Flex Gen2 modules

The names of the modules are defined as follows. The Fortimo LED DLM Flex 2000/840 Gen2 is used here as an example.

Fortimo	: our brand name for efficient, clear and reliable lighting
LED	: the light source used
DLM	: downlight module
Flex	: The new DLM modules offer flexibility in terms of design and usage
2000	: 2000 lumens
/840	: stands for a color rendering index of 80; 40 stands for a CCT of 4000 K
Gen2	: indicates the 2nd generation

Xitanium LED drivers for Fortimo LED DLM Flex Gen2

These highly efficient LED drivers are designed for the Fortimo LED modules. These are available as a built-in or independent driver, dimmable or with a fixed output.
More information about the Xitanium drivers for Fortimo LED DLM Flex Gen2 modules can be found in the Xitanium indoor down and spotlight driver design in guide and the Xitanium commercial leaflet. These documents can be downloaded via www.Philips.com/Technology.

- The Xitanium driver datasheets can also be downloaded on this website.



LED DLM cable 60 cm



Xitanium emergency kit

LED DLM cable

A Cable, 60 cm in length a wire diameter of AWG24 (0.5 mm), is available to connect the built-in or SELV drivers with a JST connector. The cable fits the poke-in connectors on the module at one end and has a JST connector to be attached to the driver on the other end.

Emergency Application

For emergency lighting application, Philips offers the Xitanium emergency kit (Xitanium EM 3W 50mA 50V 3H 230V) shown on the left as a de-centralized emergency solution. In case of the loss of AC power, the emergency kit will take over operation of the lamp source, Fortimo LED DLM Flex Gen2 for example. The emergency kit is designed to run the Fortimo system for >3 hours with a light output of ~150-260 lm depending on the module being used.

In case of a centralized solution, Xitanium LED drivers can be also directly powered by a DC voltage for emergency application. More details on the Xitanium emergency kit as well as Xitanium LED drivers, please refer to www.Philips.com/Technology.

Optical design-in

Fortimo LED downlight modules address the issue of binning

High-quality LED light is achieved by mixing the light of various LEDs. High quality white light is characterized by a good color consistency and a color rendering of >80, popular CCTs in general lighting applications of 3000 K and 4000 K. The mixing chamber ensures perfectly mixed light, resulting in uniform colors and good color consistency. The function of the diffuser is to shape the light distribution. With DLM Flex Gen2, it is possible to use the polycarbonate diffuser provided, or develop another to specifically fit an application. You have the freedom to design your own secondary optics. The LED module integrates easy mounting options for secondary optics. The overall dimensions of the LED module are optimized for lumen packages varying from 1100 to 5000 lumens.

Color consistency (SDCM)

The current specification of the Fortimo modules for color consistency is 3 SDCM at 0 hours, xy deviation 0.005 (L2) and 0.01 (L2+). SDCM stands for Standard Deviation of Color Matching and the value 3 refers to the size of an ellipse around the black body locus. Staying within this ellipse results in a consistency of light whereby there is no perceivable difference from one luminaire to another.

Starting characteristics

The Fortimo modules can be switched on in milliseconds, which is a general characteristic of LEDs. With the dimmable driver, the light can be switched on at a dimming level from 1% to 100% in milliseconds.

Lumen maintenance

L70B50 @ 60,000 hours

The quality of the LED DLM Flex Gen2 portfolio is backed by the Philips' claim of B50L70 @ 60,000 hours. This means that at 60,000 hours of operation at least 50% of the LEDs' population will emit at least 70% of its original amount of lumens.
This is contrary to conventional light sources, where some time after Service Life Hours the conventional light source emits no light at all.

In this section the example graphs show the estimated lumen depreciation curves for different percentage of the population and at nominal Tc temperatures. The actual data for the LED DLM modules can be found in the associated datasheet at www.Philips.com/Technology.

Average rated life is based on engineering data testing and probability analysis. The Fortimo LED DLM Flex Gen2 modules are specified to reach L70B50 for the nominal specifications.

Lumen maintenance for B20 and B50

The example graph is showing the lumen maintenance (% of initial lumen over time) for B50 (50% of the population) and B20 (80% of the population).

Please look up the actual lumen maintenance graph in the associated datasheet of the Fortimo LED DLM Flex Gen2 you are using at www.Philips.com/Technology.

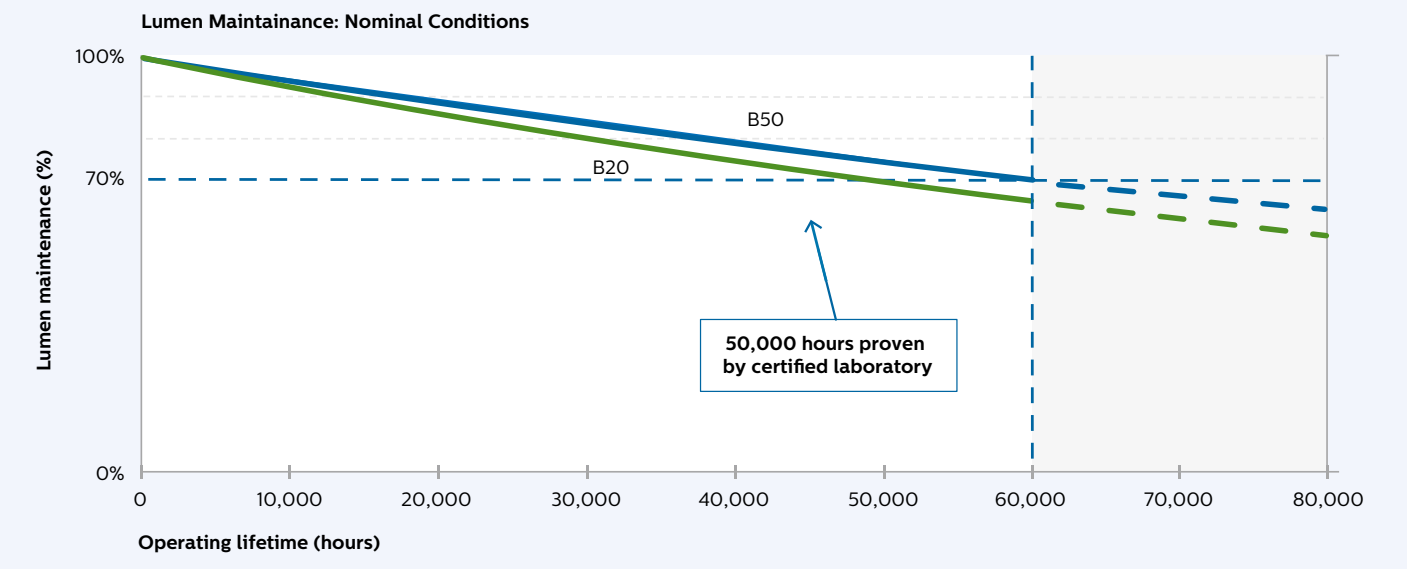

Example lumen maintenance as a function of operating hours for B20 and B50 at Tc nominal

Secondary optics

The Fortimo LED DLM Flex Gen2 module generates a lambertian beam shape, the polar intensity diagrams for each module are given in the datasheets. This is a pragmatic starting point for secondary optic design. The secondary optic design should not cover the exit aperture. Ray-set files are available via the website www.Philips.com/Technology.

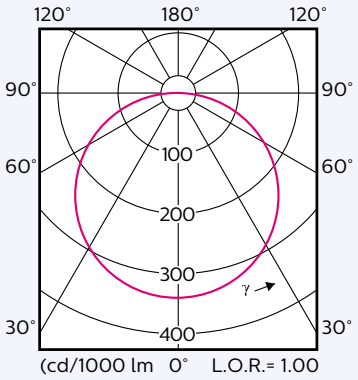

Example Light distribution diagram

On the top of the Fortimo LED DLM Flex Gen2 there are mounting options (rim of diffuser and three mounting holes) for positioning secondary optics.

Companies supplying reflectors for secondary optics

Secondary optics is not part of the Fortimo LED DLM Flex Gen2 system offering. This can be an added value area for OEMs. We provide a list of complementary reflector partners that have developed reflectors around the Fortimo LED DLM Flex Gen2. The table below gives a list of complementary partners offering compatible reflectors for Fortimo LED DLM Flex Gen2 modules.

The following are examples of reflector suppliers that have products available to be used with the Fortimo LED DLM Flex Gen2 system. Reference to these products does not necessarily mean they are endorsed by Philips. Philips gives no warranties regarding these products and assumes no legal liability or responsibility for any loss or damage resulting from the use of the information given here.

Complementary reflector partner	Website
Jordan Luxar	www.jordan-luxar.de
NATA	www.nata.cn
ACL	www.reflektor.de
Almeco	www.almecogroup.com
Widegerm	www.widegerm.com.hk

Mechanical design-in

About the Fortimo LED DLM Flex Gen2 module

The LED module consists of the following main components:

1. LED board with LEDs
2. Option of 2 different housings as accessory
3. Cable to connect to drivers with a JST connector, also available as an accessory

Assembling the Module

The DLM Flex Gen2 module can be put together as described in the picture below. The LED board along with any of the 2 housings, have 3 screw holes. These need to be aligned and stacked together.

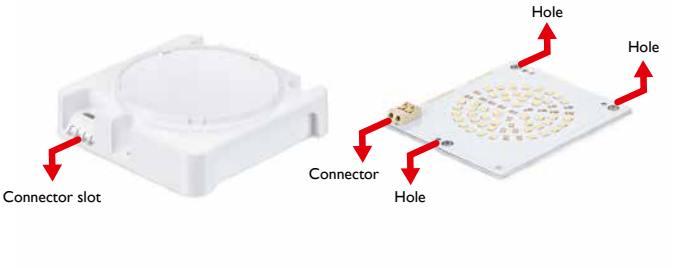

Assembly of the DLM Flex Gen2 module



Putting together the DLM Flex Gen2 module

Mechanical fixation

Please note that due to the thickness of the LED board, mounting of the light engine from the back is not possible, only fixation through the module is applicable. The picture below shows the correct mounting procedure. There will be no difference to this irrespective to the housing used. The high housing has screw holes on the side that can be used to fix reflectors. The diameter of these holes is 3.4 mm and PT K40 self-tapping screws can be used. The Maximum load per screw is 5N with maximum weight of 500 gr and the total maximum load applied on the side fixation holes is 20N with maximum weight of 2000 gr. The recommended screw type is a self-tapping screw, like PT K40. 2D or 3D CAD drawings are available upon request or at www.Philips.com/Technology.

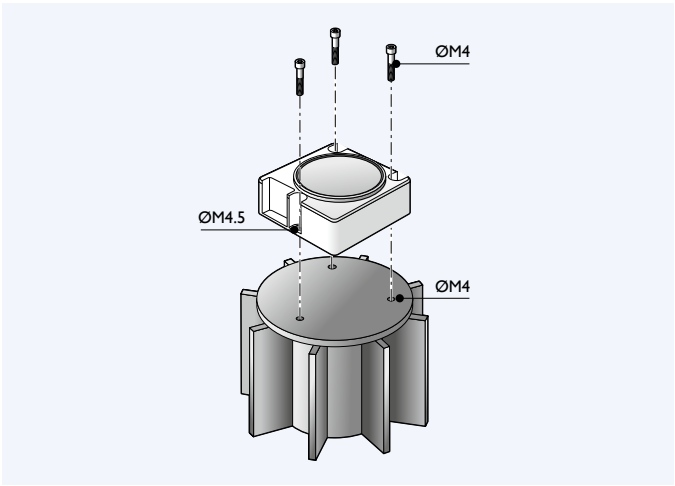

Fixing holes at the module to screw the heat sink

Recommended screw type

It is suggested to use a M4 metric socket cap screw from the top of the module to heat sink. The recommended torque on the M4 screws is 0.5 Nm.

Advice: Do not screw into the top of the module

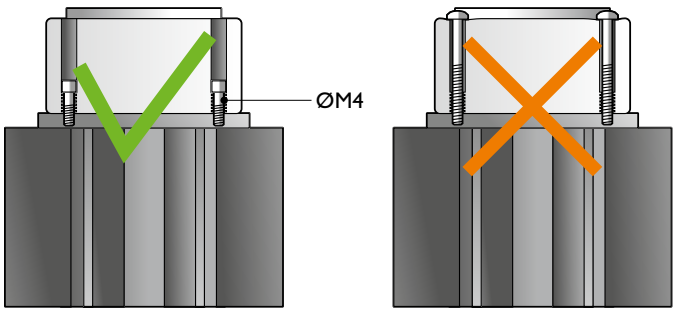

Thermal design-in

The critical thermal management points for the LED module are set out in this chapter in order to facilitate the design-in of Fortimo LED DLM Flex Gen2 modules. If these thermal points are taken into account, this will help to ensure optimum performance and lifetime of the LED system.

Optimum performance

To ensure optimum performance, the Fortimo LED DLM Flex Gen2 system must operate within specified temperature limits.

Test requirements

Measurements, e.g. of temperature, luminous flux and power, are reliable once the luminaire is thermally stable, which may take between 0.5 and 2 hours. The time depends on the thermal capacity of the luminaire (see also the relevant clauses in IEC 60598). Measurements must be performed using thermocouples that are firmly glued to the surface (and not, for example, secured with adhesive tape).

Critical measurement points

Because LEDs are temperature sensitive, LED modules require a different approach with respect to the maximum permissible component temperature. This is different to most other types of light sources.

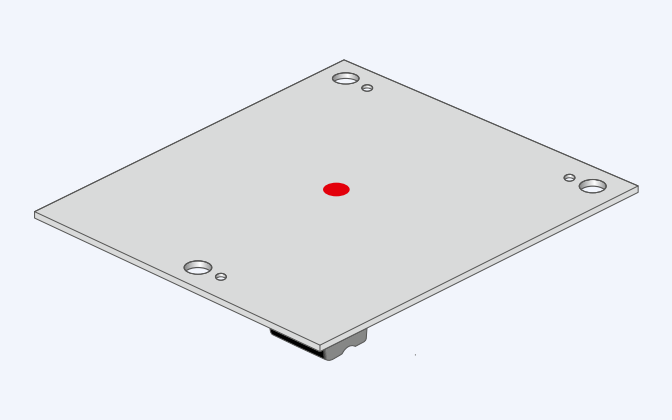

Temperature test point Tc

For LEDs the junction temperature is the critical factor for operation. Since there is a direct relation between the case temperature and the LED junction temperature, it is sufficient to measure the aluminum casing of the LED module at its critical point. The critical point is on the rear surface of the LED module, as shown in the figure on the left. If the case temperature (Tc) at the critical measurement point exceeds the recommended maximum temperature, the performance of the LEDs will be adversely affected, for example in terms of light output, lifetime or lumen maintenance.

Warning: Case temperature and thermal circuit

To ensure the performance of the Fortimo LED DLM system a maximum Tc is defined on the rear surface of the LED module. At this case temperature the proper junction temperature of the LEDs is assured and the performance indicated (lifetime, light output, lumen maintenance, etc.) can be guaranteed. Please note that DLM Flex Gen2 has no NTC feature on board.

How to measure the critical temperature point Tc

The Tc temperature can be measured by making a thin v-groove or a small drill hole in the heat sink to reach the bottom of the LED module. Be sure to measure the temperature of the bottom metal part of the module and not of the thermal interface material (TIM) or in the central hole.

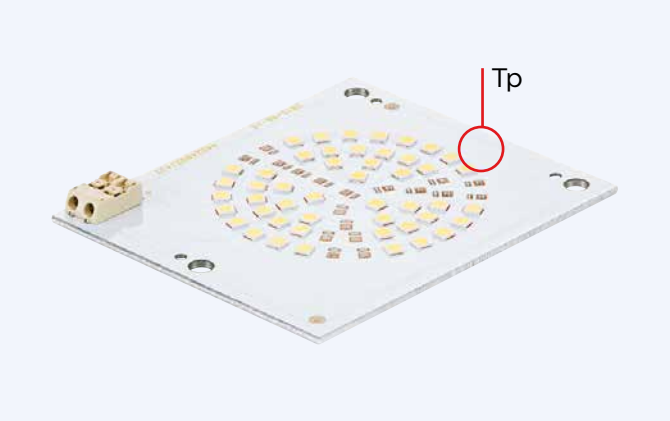

Tp temperature measurement point

For Fortimo LED DLM Flex Gen2, Tp as indicated in the figure on the bottom right, previous page, can also be used for easier access. The correlation between Tp and Tc is dependent on the heat sink design. The difference between Tp and Tc is around 1 to 2 °C using the standard heat sinks from our complementary partners.

Thermal Interface Material (TIM)

The function of a Thermal Interface Material (TIM) is to reduce thermal impedance between the LED module and the heat sink. The Thermal Interface Material replaces air, which is a thermal insulator, by filling the gaps with material that has better thermal conductivity. This is shown schematically in the figure on the left. Philips recommends to always use a Thermal Interface Material (TIM). The DLM Flex Gen2 is designed to be mounted with M4 screws. The advised applied torque is 0.5 Nm and should not exceed 1 Nm in order to avoid damage to the module.

Advised TIM	Recommended Torque
Paste	0.5 Nm
0.5 mm soft pad material (Shore A < 40)	0.25 Nm

In order to avoid air gaps underneath the LED board, it is not recommended to use hard thermal interface materials (Shore A > 80), like graphite.

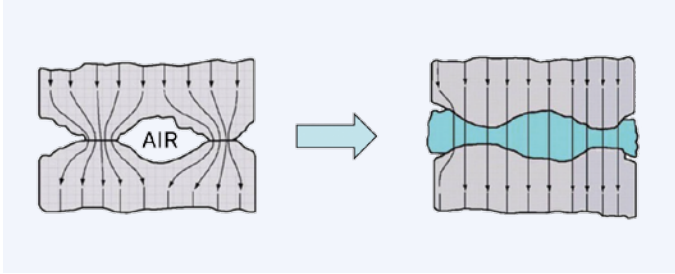

The working principle of Thermal Interface Material (TIM)

In general:

- Thermal paste performs better than thermal pads.
- The lower the thermal impedance the better.
- The thinner the TIM the better, restriction is the surface flatness.

The following are suggestions for thermal interface material products that can be used with the Fortimo LED DLM system. Reference to these products does not necessarily mean they are endorsed by Philips. Philips gives no warranties regarding these products and assumes no legal liability or responsibility for any loss or damage resulting from the use of the information given here.

Thermal interface partners	
Laird Technologies	www.lairdtech.com
The Bergquist Company	www.bergquistcompany.com

Electrical and thermal analogy

Standard static thermal situations can be modeled using 'thermal resistances'. These resistances behave like electrical resistances. The analogy between electrical and thermal resistances is explained in the figure entitled 'Electrical and thermal analogy' on the left. The electrical units are shown on the left, while the thermal equivalents are given on the right. With a known voltage difference at a certain current it is possible to calculate the electrical resistance using Ohm's law. The same applies for a thermal resistance. If the temperature difference and the thermal power are known, the thermal resistance can be calculated using the thermal Ohm's law.

Electrical:
U = voltage difference [V]
I = current [A]
R = resistance [Ω]
Ohm's law:
U= I * R

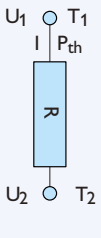

Thermal:
ΔT = temperature difference (ºC)
P_{th} = thermal power (W)
R = thermal resistance (K/W) or (ºC/W)

Thermal Ohm's law:
ΔT= Pth * Rth

Thermal model

A thermal model that can be used to determine the required thermal performance of the cooling solution for the LED module is shown in the figure below.

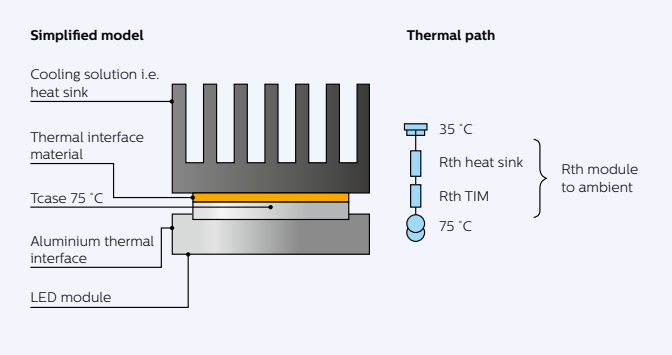

A simplified model of the thermal path from LED module to ambient

Warning:

The maximum temperature difference between Tc and Tambient should never exceed 50°C for DLM Flex Gen2, otherwise it could lead to a reduction in the lifetime of the system.

Passive cooling

Passive cooling systems are based on the fact that hot air moves upwards, thus creating airflow along the surfaces. This is called natural convection. There are many standard heat sinks available, but it is also possible to design your own heat sink. In general, a passive cooling solution requires a larger heat sink than an active cooling solution.

Some additional design guidelines for passive cooling include:

- Limit the number of thermal interfaces in the thermal path from module to ambient.
- Thick fins conduct heat better than thin fins.
- Large spacing between fins is better than small spacing between fins; air flow follows the path with least resistance.
- Make cooling surfaces more effective by using proper conductive materials, appropriate thickness and correct fin orientation.
- Thermal radiation plays a significant role → anodized or powder-coated surfaces are preferable to blank surfaces.

Complementary thermal solution partners

Thermal solutions do not form part of the Fortimo LED DLM system offering. This is an added-value area for OEMs, offering the possibility to differentiate. However, there are many thermal solution companies who have a standard portfolio of compatible heat sinks available, enabling quick and easy luminaire creation. The table below gives a list of complementary partners offering compatible cooling systems for Fortimo LED DLM Flex Gen2 modules. An up-to-date list can be found on our website: www.philips.com/Technology

The following are examples of providers of cooling solutions that can be used with the Fortimo LED DLM system. Reference to these products does not necessarily mean they are endorsed by Philips. Philips makes no warranties regarding these products and assumes no legal liability or responsibility for any loss or damage resulting from the use of the information given here.

Thermal interface partners	Website	Status
Sunon	www.sunon.com	Released
AVC	www.avc.com.tw	Released
Nuventix	www.nuventix.com	Released
Wisefull	www.wisefull.com	Released
MechaTronix	www.mechatronix-asia.com	Released

Electrical design-in

Connecting the module

There are two connectors available on the DLM Flex Gen2 LED board, these have been clearly marked for LED + and LED -. These can be used with simple push in wires in order to connect to the driver. The following are the specifications for the wires that can be used:

Specification item	Value	Unit
Wire cross-section (Solid wire)	0.2 – 0.8	mm^2
	24 – 18	AWG
Wire cross-section (Stranded wire)	0.3 – 0.5	mm^2
	22 – 20	AWG
Wire strip length	7.5 – 8.5	mm^2

The stranded wires should be pre-bonded or twisted and tinned before insertion.

If the DLM Flex Gen2 module is being used with a driver having a JST connector, the DLM Flex Gen2 cable can be used.



One end of the cable can be inserted into the JST connector of the driver. The other end has wires that can be pushed into the connectors on the module. Please note that 2 wires will be left unused. The following is the color scheme for connection:

Red : LED +
Black : LED -

The DLM Flex Gen2 module does not come with a Rset on board to provide the nominal current. The current can be set by means of a resistor or via programming. More information about such tuning can be found further in the following sections.

Tune the luminaire's flux (lm) and efficacy (lm/W)

The LED DLM Flex Gen2 specifications are provided under nominal conditions, like nominal flux at nominal current. This setting changes depending on the housing chosen. For example, the LED board must be overdriven in order to get the same lumen output from the high housing, as is seen with the shallow housing. The nominal settings are adjusted accordingly. Each datasheet has the required information. These can be found at www.Philips.com/Technology. It is however possible to deviate from this nominal current. By altering the current, we can obtain different flux outputs. At the same time, the required forward voltage (Vf) also changes, leading to a change in the efficacy (lm/W). The following sections explain the impact and boundaries.

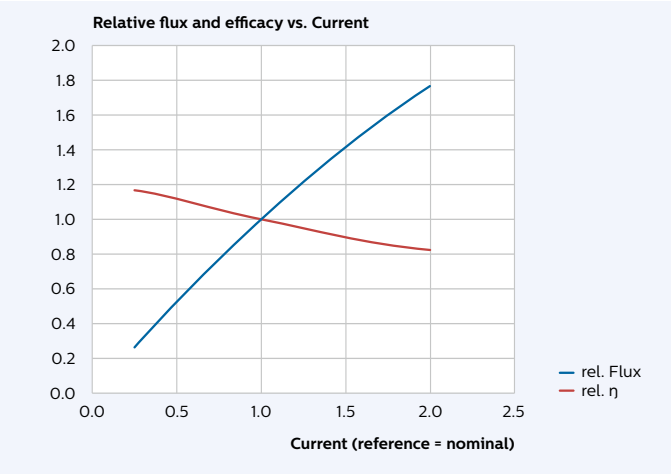

Example graph showing flux and efficacy as a function of current

Effect of Choosing a different current value

In case the customer chooses to set the current (either by programming or by applying an Rset resistor) other than nominal, the lifetime and reliability of the LED DLM must be taken into account. The following current regions can be distinguished:

1. **Current < nominal current* (mA)**
   a. Efficacy (lm/W) higher than nominal value lumen output (lm) lower than nominal value
   b. Lifetime > 60,000 hours
2. **Current between nominal current and absolute maximum current** (mA).**
   a. Efficacy (lm/W) lower than nominal value lumen output (lm) higher than nominal value
   b. Lifetime may be affected based on the current chosen. For up-to 100% overdrive; 50,000 hours can be achieved.
3. **Current > absolute maximum current: do not exceed the absolute maximum current as this can lead your LED DLM module to failure. No warranty applicable in this case.**

The rated average life is based on engineering data testing and probability analysis. The hours are at the L70B50 point.

* Nominal current at which performance and lifetime is specified

** Maximum current tested for safety

Set the output current via Rset

By making use of a resistor component with a determined Ohmic value you can set the required current for your LED module. This component can be a leaded standard 1% tolerance resistor of e.g. 0.125 W or 0.25 W, 50 V. The Rset will not be part of the electrical chain driving the module.
An example of a resistor placed into the drivers' input is shown on the left.
Three different Rset resistors are utilized in the Xitanium Indoor Spot and Downlight LED driver portfolio:
Rset1 (older drivers)*; allows output current setting up to 700 mA
Rset2; allows output current setting up to 2000 mA
LEDset: Allows output current setting upto 8000 mA
In all documentation, Rset may refer to either Rset1, Rset2 or LEDset, depending on the driver type.
Please check the driver datasheet for which Rset the driver you use reads. You can find this at www.Philips.com/Technology.

Note:
The Rset must be inserted such that there is no mechanical pressure on it from the driver casing being closed.
Rset1 and Rset2 use different pins on the driver (and on the JST connector). The Rset1 and Rset2 values with the corresponding drive currents are shown in following tables. It is advised to select the nearest lower resistor value that is available to you, if the exact determined value is not at hand.

* All future drivers will support LEDset.



Poke-in Rset inserted in a driver



JST Rset inserted in a driver

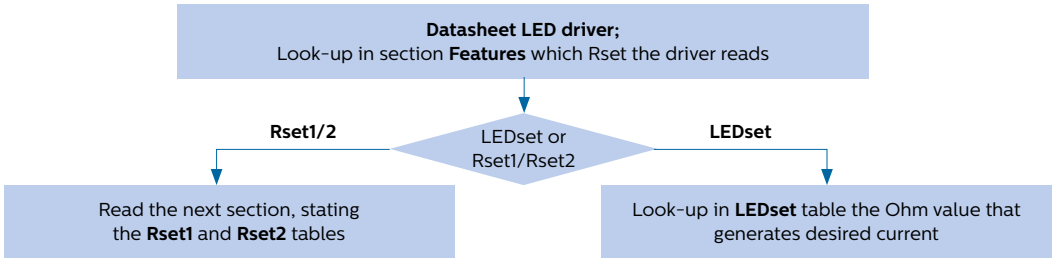

Note on E-series: in electronics, international standard IEC 60063 defines preferred number series for amongst others resistors. It subdivides the interval between subsequent values from 1 to 10 into 6, 12, 24, 48, 96 etc. steps. These subdivisions ensure that when some arbitrary value is replaced with the nearest preferred number, the maximum relative error will be on the order of 20%, 10%, 5%, 1% etc.

LEDset – E96 series: table with E96 resistor values

LEDset [Ω]	Idrive [mA]	LEDset [Ω]	Iset [mA]	LEDset [Ω]	Iset [mA]	LEDset [Ω]	Iset [mA]
open	driver's default current	23700	211	11000	455	5110	978
49100	102	23600	212	10700	467	4910	1018
48700	103	23200	216	10500	476	4870	1027
47500	105	22100	226	10200	490	4750	1053
46400	108	21600	231	10000	500	4640	1078
45300	110	21000	238	9760	512	4530	1104
44200	113	20500	244	9530	525	4420	1131
43200	116	20000	250	9310	537	4320	1157
42200	118	19600	255	9090	550	4220	1185
41200	121	19100	262	8870	564	4120	1214
40200	124	18700	267	8660	577	4020	1244
39200	128	18200	275	8450	592	3920	1276
38300	131	17800	281	8250	606	3830	1305
37400	134	17400	287	8060	620	3740	1337
36500	137	16900	296	7870	635	3650	1370
35700	140	16500	303	7680	651	3570	1401
34800	144	16200	309	7500	667	3480	1437
34000	147	15800	316	7320	683	3400	1471
33200	151	15400	325	7150	699	3320	1506
32400	154	15000	333	6980	716	3240	1543
31600	158	14700	340	6810	734	3160	1582
30900	162	14300	350	6650	752	3090	1618
30100	166	14000	357	6490	770	3010	1661
29400	170	13700	365	6340	789	2940	1701
28700	174	13300	376	6190	808	2870	1742
28000	179	13000	385	6040	828	2800	1786
27400	182	12700	394	5900	847	2740	1825
26700	187	12400	403	5760	868	2670	1873
26100	192	12100	413	5620	890	2610	1916
25500	196	11800	424	5490	911	2550	1961
24900	201	11500	435	5360	933	2490	2008
24300	206	11300	442	5230	956	short	driver's max. current

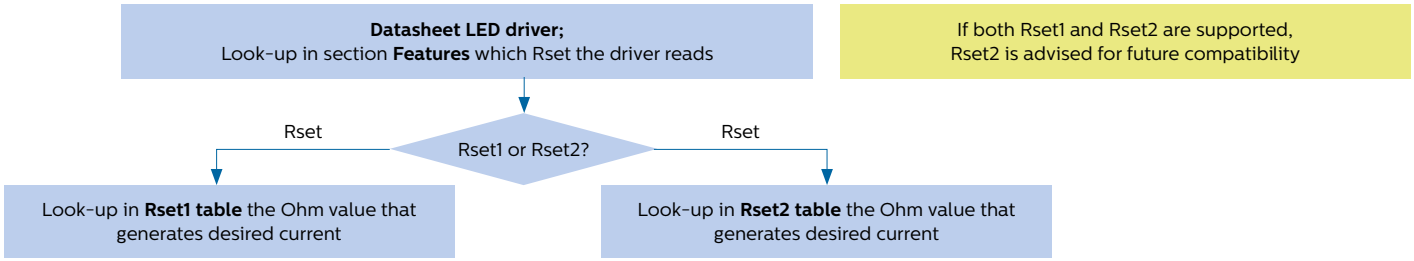

Note on E-series: in electronics, international standard IEC 60063 defines preferred number series for amongst others resistors. It subdivides the interval between subsequent values from 1 to 10 into 6, 12, 24, 48, 96 etc. steps. These subdivisions ensure that when some arbitrary value is replaced with the nearest preferred number, the maximum relative error will be on the order of 20%, 10%, 5%, 1% etc.

Note: next page shows extended Rset2 table: E96 values, stating smaller increments

Rset1 – E24 series

Ret1 [Ω]	Iset [mA]	Ret1 [Ω]	Iset [mA]	Ret1 [Ω]	Iset [mA]	Ret1 [Ω]	Iset [mA]
39	200	510	292	6k8	583	91k	690
43	201	560	300	7k5	591	100k	691
47	202	620	309	8k2	599	110k	692
51	203	680	318	9k1	60	120k	693
56	204	750	327	10k	614	130k	693
62	206	820	336	11k	621	150k	695
68	208	910	347	12k	627	160k	695
75	209	1k	358	13k	632	180k	696
82	210	1k1	369	15k	640	200k	696
91	212	1k2	379	16k	643	220k	697
100	215	1k3	388	18k	649	240k	697
110	217	1k5	406	20k	654	270k	698
120	219	1k6	414	22k	658	300k	698
130	221	1k8	429	24k	661	330k	698
150	226	2k	442	27k	665	360k	699
160	228	2k2	455	30k	669	390k	699
180	232	2k4	466	33k	671	430k	699
200	236	2k7	481	36k	674	470k	699
220	240	3k	494	39k	676	510k	699
240	244	3k3	505	43k	678	560k	700
270	250	3k6	517	47k	680	620k	700
300	256	3k9	525	51k	682	680k	700
330	261	4k3	536	56k	683	750k	700
360	267	4k7	546	62k	685	820k	700
390	272	5k1	555	68k	686	910k	700
430	279	5k6	564	75k	688	1M	700
470	286	6k2	574	82k	689	No Rset	default

Rset2 – E24 series

Ret1 [Ω]	Iset [mA]	Ret1 [Ω]	Iset [mA]	Ret1 [Ω]	Iset [mA]	Ret1 [Ω]	Iset [mA]
short	100	430	245	2k	733	9k1	1558
100	100	470	261	2k2	780	10k	1604
110	106	510	277	2k4	823	11k	1653
120	111	560	297	2k7	884	12k	1694
130	116	620	318	3k	941	13k	1730
150	121	680	340	3k3	993	15k	1793
160	130	750	368	3k6	1042	16k	1817
180	13	820	392	3k9	1086	18k	1864
200	146	910	422	4k3	1143	20k	1902
220	155	1k	452	4k7	1192	22k	1935
240	166	1k1	485	5k1	1238	24k	1965
270	176	1k2	515	5k6	1293	27k	2000
300	190	1k3	545	6k2	1350	No Rset	default
330	204	1k5	602	6k8	1402		
360	215	1k6	632	7k5	1454		
390	228	1k8	684	8k2	1503		

Rset priority behavior for drivers that read both Rset1 and Rset2

Rset1	Rset1	Driver status
Open	Open	Driver's default current (see datasheet)
Rset	Open	Rset1
Open	Rset	Rset2
Rset	Rset	Rset2
Short	Open	Rset1 (driver's minimum current, see datasheet)
Short	Short	Rset2 (driver's minimum current, see datasheet)
Open	Short	Rset2 (driver's minimum current, see datasheet)

Please refer to the datasheet of the driver you use to find which Rset or Rsets the driver actually reads.

Rset2 – E96 series: table with E96 resistor values, stating smaller increments but covering same range as the E24 series on previous page

Rset2 [Ω]	Iset [mA]	Rset2 [Ω]	Iset [mA]	Rset2 [Ω]	Iset [mA]	Rset2 [Ω]	Iset [mA]	Rset2 [Ω]	Iset [mA]	Rset2 [Ω]	Iset [mA]
short	min.	255	171	665	335	1740	669	4530	1171	11800	1686
100	100	261	173	681	341	1780	679	4640	1185	12100	1698
102	101	267	175	698	347	1820	689	4750	1198	12400	1708
105	103	274	178	715	354	1870	701	4870	1212	12700	1719
107	104	280	181	732	361	1910	711	4910	1216	13000	1730
110	105	287	184	750	368	1960	724	5110	1239	13300	1739
113	107	294	187	768	374	2000	733	5230	1253	13700	1752
115	108	301	191	787	381	2050	745	5360	1267	14000	1761
118	110	309	194	806	387	2100	757	5490	1281	14300	1771
121	111	316	197	825	394	2160	770	5620	1295	14700	1783
124	113	324	201	845	400	2210	782	5760	1308	15000	1793
127	115	332	204	866	407	2320	806	5900	1322	15400	1802
130	116	340	207	887	414	2360	815	6040	1335	15800	1812
133	118	348	210	909	422	2370	817	6190	1349	16200	1822
137	119	357	214	931	429	2430	829	6340	1362	16500	1829
140	120	365	217	953	436	2490	841	6490	1375	16900	1838
143	122	374	221	976	444	2550	853	6650	1389	17400	1850
147	123	383	225	1000	452	2610	865	6810	1403	17800	1859
150	125	392	229	1020	459	2670	877	6980	1415	18200	1867
154	127	402	233	1050	469	2740	891	7150	1428	18700	1877
158	129	412	237	1070	475	2800	903	7320	1441	19100	1885
162	131	422	241	1100	485	2870	916	7500	1454	19600	1894
165	132	432	246	1130	494	2940	929	7680	1467	20000	1902
169	134	442	250	1150	500	3010	943	7870	1480	20500	1910
174	136	453	254	1180	509	3090	956	8060	1493	21000	1918
178	137	464	259	1210	518	3160	968	8250	1506	21600	1928
182	139	475	263	1240	527	3240	982	8450	1518	22100	1936
187	141	487	268	1270	536	3320	996	8660	1531	23200	1952
191	143	491	270	1300	545	3400	1009	8870	1544	23600	1959
196	145	511	278	1330	554	3480	1022	9090	1557	23700	1960
200	146	523	282	1370	565	3570	1037	9310	1569	24300	1968
205	148	536	287	1400	574	3650	1049	9530	1580	24900	1975
210	151	549	292	1430	582	3740	1062	9760	1592	25500	1982
216	153	562	297	1470	594	3830	1075	10000	1604	26100	1989
221	155	576	302	1500	602	3920	1088	10200	1614	26700	1996
232	161	590	307	1540	614	4020	1103	10500	1629	27000	2000
236	163	604	313	1580	626	4120	1117	10700	1639	open	default
237	164	619	318	1620	638	4220	1131	11000	1653		
243	167	634	323	1650	645	4320	1145	11300	1666		
249	169	649	329	1690	656	4420	1158	11500	1674		



Warning:

Please note that changing the rset changes the current and voltage at which the module operates. You may have to adapt your design accordingly. In case no Rset is used, please check the default setting of your driver. This current may be higher than what your module can handle!

Programming the output current

The Xitanium TD drivers offer a full range of controls, enabling customizable luminaire design and performance. It
is possible to control light output levels, preset dimming protocols and set system specifications in the factory and even in the complete installations. This can be done with the Philips MultiOne configurator.
The MultiOne configurator is an intuitive tool that unlocks the full potential of all programmable drivers from Philips, ensuring that the driver performance matches the needs of the lighting solution. It offers unprecedented flexibility, before, during and after the product installation.
With the latest selected drivers, SimpleSet® functionality is also supported via MultiOne.
Please check the datasheet of the driver on www.philips.com/technology to know if your driver supports SimpleSet® or not.
For more information on MultiOne visit:
www.philips.com/multiOne
This site contains detailed information on how to install the software and how to program the driver.

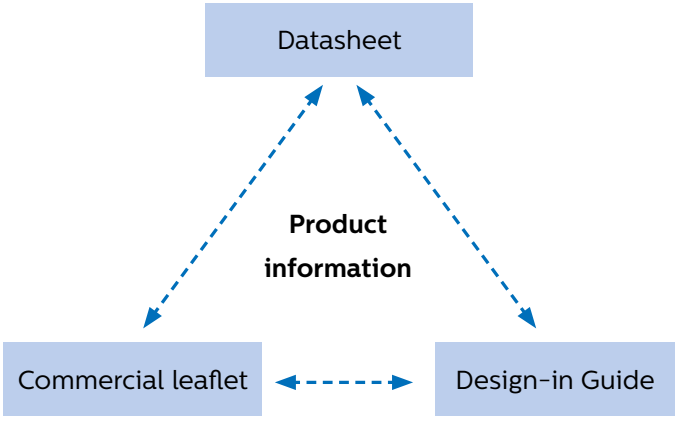

Xitanium Indoor Spot and Downlight LED drivers

For the drivers, the same documentation philosophy holds as for the LED modules, meaning that also three documents make up the full information set of the drivers.

For detailed info, please refer to these documents for your driver on www.Philips.com/Technology.

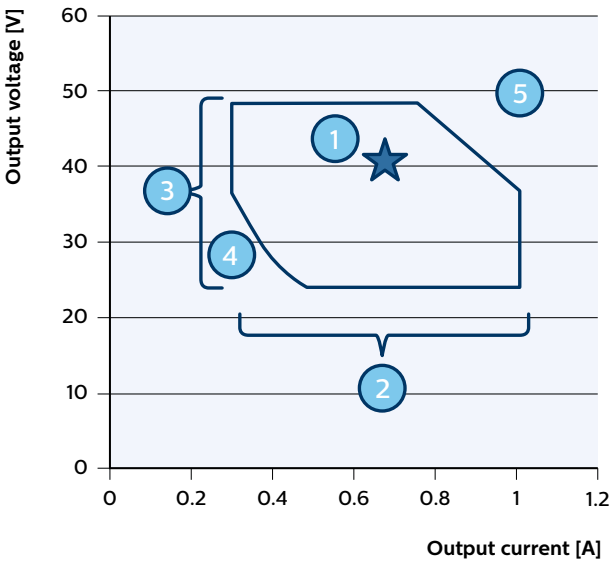

1. Required operating point
2. Current can be set to needs within range
3. Driver adapts to required voltage, given it fits range
4. Driver minimum power limit
5. Driver maximum power limit

Example Operating window of the Xitanium driver

Xitanium Driver Operating window

LED technology is rapidly evolving. Using more efficient LEDs in a next generation means the same light output can be achieved with lower currents. At the same time, LEDs can be driven at different currents levels based on the application requirement. Typically, LED drivers are available in discrete current levels e. g. 350 mA, 530 mA or 700 mA. It is often necessary to replace a driver when more efficient LEDs become available.

One of the key features of the Xitanium LED drivers is the adjustable output current (AOC), offering flexibility and future-proof luminaire design. The Xitanium drivers can operate in a certain “operating window”. This window is defined by the maximum and minimum voltage and current that the driver can handle. An example of an operating window is shown on the left. The area indicates the possible current/voltage combinations. The current you select will depend on the type and manufacturer of the LEDs or the specific LED configuration of the PCB design. The operating window of every driver can be found in the associated driver datasheets which can be downloaded on following website: www.Philips.com/Technology.

Note:
By means of dimming it is possible to go below the minimum value of the specified output current. The output current of these drivers can be set in three ways.

1. By connecting a specific resistor value to the driver’s Rset input.
2. Drivers with SimpleSet® functionality can be configured using the Philips MultiOne software and SimpleSet® interface.
3. TD driver versions can be programmed via the MultiOne interface in order to set the desired current. (www.Philips.com/multione).

How to determine what value the output current should be set at will be explained in the next sections.

To Select an Appropriate Driver

Depending on your requirements, several drivers can be a solution for you. The following steps can help you in selecting a driver. For a complete overview of the available drivers, please refer to the download section of www.Philips.com/Technology.

1. Determine your required driver current (Idrive) and voltage (Vf).
2. Calculate the required power (Pdrive) where Pdrive=Vf x Idrive (W).
3. Select the datasheets from the website mentioned above based on the driver having a power greater than the required power. For Fortimo SLM Gen5, only SELV drivers can be selected.
4. Does the required current fit the current range of the driver? The current range of the driver can be seen in the name itself. For example, in the 17 W LH 0.3-1 A 24 V TD/Is 230 V, the minimum driver current is 0.3 A and maximum is 1 A.
   - Idriver min ≤ Idrive ≤ Idriver max?
5. Does the required voltage fit the voltage range of the driver? The voltage range of the driver can be seen in the name itself. For example, in the 17 W LH 0.3-1 A 24 V TD/Is 230 V, the maximum driver voltage is 24 V and the minimum is 50% of this value, which is 12 V in this case.
   - Vdriver min ≤ Vf ≤ Vdriver max?
6. Does the required power fit the power range of the driver?
   In the naming of the driver, you can see the maximum power possible. For example, in the 17 W LH 0.3-1 A 24 V TD/Is 230 V, the maximum power is 17 W. The minimum power is defined as Idriver min x Vdriver min.
   - Pdriver min ≤ Pdrive ≤ Pdriver max?
7. Choose your preferred dimming. Please refer to the section about naming of the drivers to know what the naming tells you about the possibilities.

Compatible drivers

A list of compatible drivers, specific to your choice of module and operating point can be obtained from the Easy Design-in Tool that can be found at easydesignintool.com.

Wiring

Connection of the driver to the mains supply/protective earth

The mains supply has to be connected to the power supply (Line and Neutral can be interchanged).

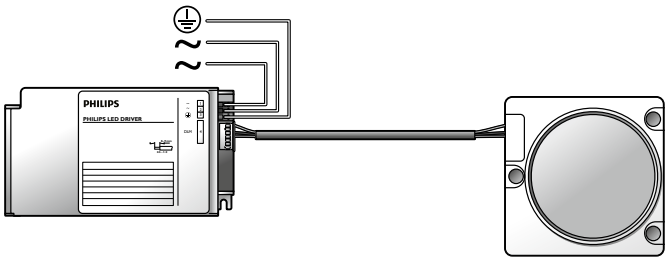

Schematic wiring diagram with protective earth

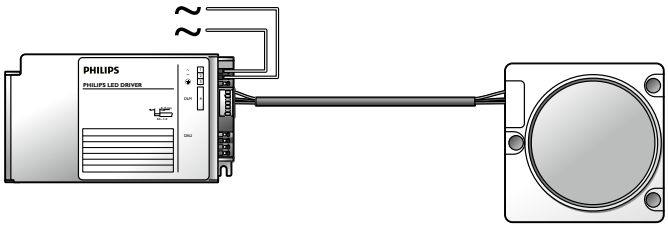

Schematic wiring diagram without protective earth

Class I and Class II

The main difference between a Class I and Class II product is the level of safety. A Class I product is safe due to the connection of the protective earth to the luminaire. All materials that can conduct electricity should be connected to the protective earth. In the event of a driver failure, it is possible that the mains may be connected to electrically conductive parts of the luminaire. As these parts are connected to the protective earth, the system fuse will blow.
In a Class II product the driver design is such that in the event of single fault conditions the mains cannot come into electrical contact with the electrically conductive parts of the luminaire. As the maximum voltage of the Fortimo LED DLM is below 60 V, it complies with the rules governing Safety Extra Low Voltage (SELV) and is therefore safe to touch. This means that connection to a protective earth is not necessary. Whether you choose Class I or Class II depends on the choice of driver and the relevant legislation.

Connection to protective earth with Xitanium SELV drivers

The DLM Flex Gen2 modules are designed to be used with SELV drivers and with these drivers, protective earthing is not required. As a result, a luminaire can be rated as Class II.

Controllability

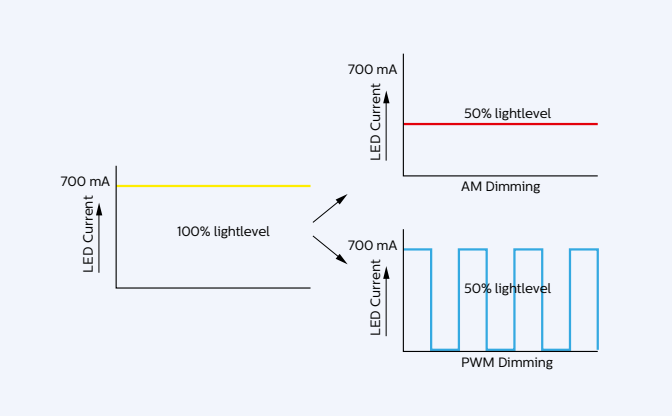

AM and PMW dimming protocol

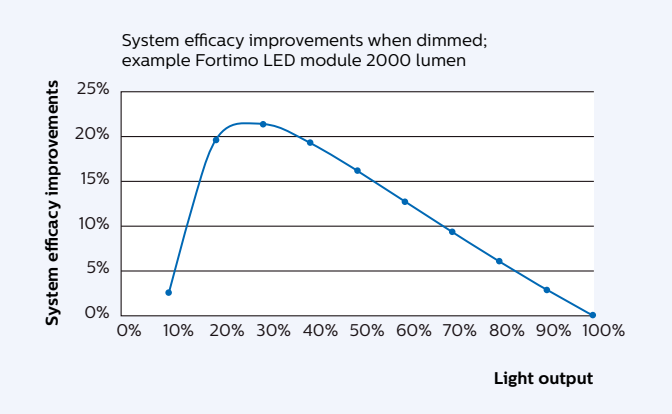

Improvements in system efficacy when dimmed with AM

Introduction

Dimming

To enable the Fortimo LED DLM modules to dim, dimmable Xitanium LED drivers are available. The dimming range is 10-100%. The Xitanium TD, TDI and TDI/s LED drivers have integrated Touch & DIM and DALI protocols. They include connectors for DALI-compatible user interfaces (controls). Thanks to the use of amplitude (AM) and not pulse width modulation (not PWM) protocol, the Fortimo system becomes up to 30% more efficient when dimmed. Next to DALI and Touch & Dim, also Xitanium LED drivers with Trailing Edge (TE) dimmability are available. Please refer to the Xitanium LED driver design-in guide for recommended dimmer types.

Benefits of AM dimming

Xitanium LED TD, TDI, TDI/s TE drivers make use of an amplitude (AM) dimming protocol, whereas most LED systems work with pulse width modulation (PWM). With PWM the current is cut into parts and dimming levels are achieved by combining on/off settings (pulses) at high frequency. AM dimming reduces the current through the LEDs to achieve lower light levels. The great advantage of this is that LEDs operate more efficiently at lower currents (see graphs on left). In addition to this, other advantages of AM dimming include:

- No audible noise during dimming.
- No visual interference with other lighting or video sources.

DALI

DALI commands

The appendix gives an overview of the DALI commands implemented in the Fortimo and Xitanium dimmable drivers.

DALI connections

The Xitanium LED TD (or TD/I, TD/Is) drivers include connectors for DALI-compatible user interfaces.

Recommended DALI controls

The following paragraphs contain basic information about the controls supplied by Philips for Fortimo LED modules. Visit our website for full specification details at www.Philips.com/Fortimo.

Below OEM control products can be considered:

1. ToBeTouched user interface (UID 8520)
2. Occuswitch DALI sensor/controller

For more details about Philips controls, please refer to the Philips control website.

1. ToBeTouched user interface

This user interface has been designed to enable intuitive control of the lighting level in DALI lighting systems. It has the following features:

- On/off switch
- Backlit light ring for direct feedback / feed forward and an attractive appearance
- Audio feedback
- Wiring of back-end
- Integrated DALI power supply for 15 LED drivers
- Startup time after mains interrupt is about 20 seconds.



ToBeTouched user interface

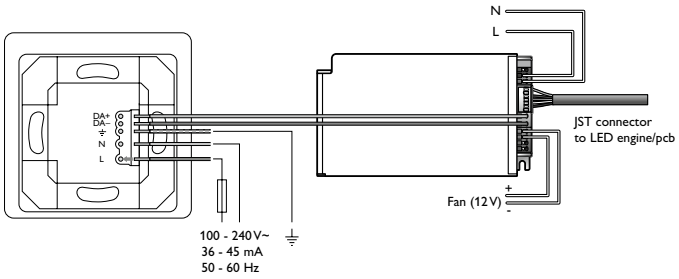

Connections

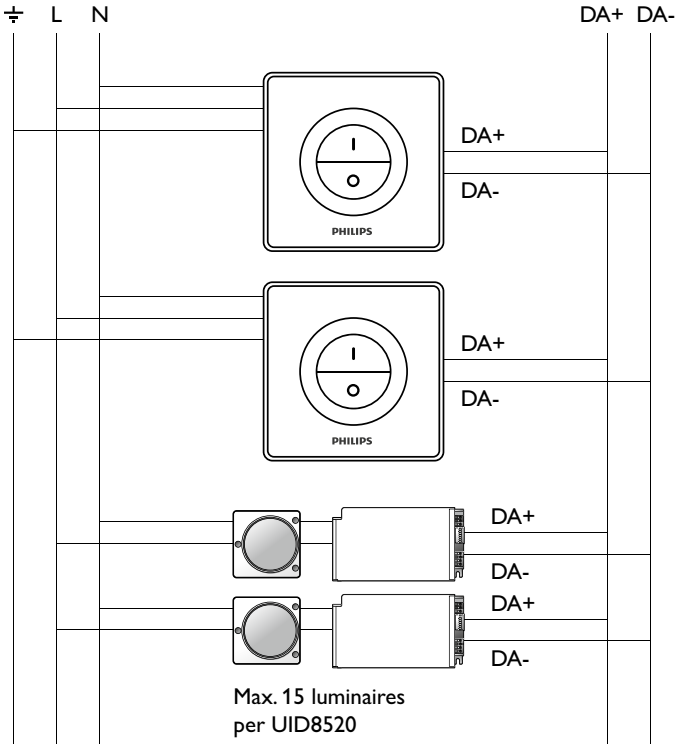

Parallel units

2. Occuswitch DALI sensor/controller

The OccuSwitch DALI is a combined sensor and controller. It will dim and switch the lights in a room or area in response to occupancy and the available daylight, with options for local override, parallel operation and network links to Building Management Systems (BMS). Savings of up to 75% can be achieved with functions like daylight-dependent dimming, occupancy control and over-dimension correction. The OccuSwitch DALI is designed for an office area of 20 to 25 m^2, or a classroom of around 40 m^2 but the area can be doubled, or even tripled, with the extension sensor LRM8118.



Occuswitch DALI sensor

Touch and Dim

Simple dimming via Touch and Dim protocol

For the Xitanium LED drivers with Touch and Dim function a switched mains is used to dim the light from the Fortimo module. The switching on and off is also done via this control input. This means that it is no longer necessary to use a power switch to interrupt the mains circuit. The 230 V supply voltage is always available at the LED driver (even when switched OFF), and light can be switched or dimmed by momentarily connecting the mains to the dim input. A short push will switch the lighting on or off, depending on the previous situation. If the switch is held pushed in, the light will dim up or down, depending on what is opposite from the last dimming direction. The driver will count the number of mains cycles and act on that.

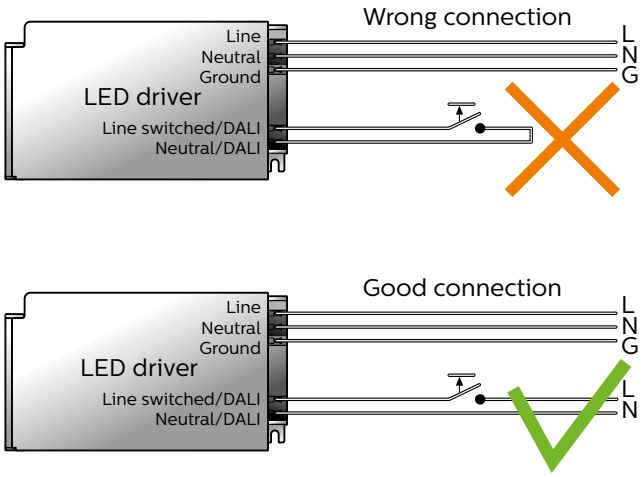

Appropriate connection to the dimmable LED driver using the Touch and DIM protocol

Simple installation

Special wiring, such as twisted pairs or special cables, is not required to install a Touch and Dim system. All wiring is standard mains wiring and the switch is a standard push-to-make switch. There is no limit to the length of the dim cable or the number of switches connected. The only limitation is the maximum number of drivers, which is thirty per dimming unit. If there is a power failure, the ballast will store the current light level. As soon as the mains power returns, the ballast will recall this stored light level. If it was dimmed to 38%, it will come back at 38%. If it was switched off, it will stay switched off.

Extending the installation

If the installation has to be extended by one or more light points / drivers, the dimming direction of the newly connected modules may be different from that of those already connected. To solve this problem a synchronization possibility is built into the drivers and can be called upon at any time. If the switch is pressed for at least 10 seconds all drivers will go to 37% light level and the dimming direction will be set to downwards.

Norms and Standards

Fortimo LED DLM together with Xitanium LED drivers comply with following norms and standards:

Safety

IEC/EN 62031	LED modules for general lighting - safety specifications
IEC 62471	Photo biological safety of lamps and lamp systems
IEC 61347-1, IEC 61347-2-13	Control gear safety

Performance

IEC 62384	Control gear performance

Electromagnetic compatibility (tested with Fortimo LED DLM, cable and Xitanium LED driver)

EN 55015, EN55022

CISPR 55015	Limits and methods of measurement of radio disturbance characteristics of electrical lighting and similar equipment
IEC/EN 61000-3-2	Limits for harmonic current emissions (equipment input current <16 A per phase)
IEC/EN 61547	Equipment for general lighting purposes -EMC immunity requirements

Environmental

The product is compliant with European Directive 2002/95/EC of January 2003 on Restriction of the Use of Certain Hazardous Substances in Electrical and Electronic Equipment (RoHS).

Approval

ENEC, CE

UV and other hazards

PET Value	>100 hrs /Klux (zero UV)
Damage Factor	0.08 @ 5000 K
IR (infrared) radiation	As well as being free of UV radiation, the LED modules are also free of infrared radiation in the beam.

Hazard Category	Emission Limit
LB	Low (Risk group 1)
LR	Exempt*
ES	Exempt*
EUVA	Exempt*
EIR	Exempt*
EH	Pass*

* Exempt and Pass means 'no risk'

Emission List

IEC recommendations

The general recommendations for luminaire design given by the IEC (IEC 60598) and the national safety regulations are also applicable to LED-based luminaires.

Note:
It is not recommended to use the Fortimo LED module without the housing. Direct exposure to the blue LED light is dangerous for the eyes.

Photobiological safety aspects

As of March 2007, LEDs and LED-based products for general lighting are no longer included in the scope of the Eye Safety standard for lasers, IEC 60825-1 'Safety of laser products'. The new lamp standard, IEC 62471 'Photo biological safety of lamps and lamp systems', which covers incoherent light sources, now applies. This international standard gives guidance on evaluating the photo biological safety of lamps and lamp systems including luminaires. It specifically defines the exposure limits, reference measurement technique and classification scheme for the evaluation and control of photo biological hazards from all electrically powered incoherent broadband sources of optical radiation, including LEDs but excluding lasers, in the wavelength range from 200 nm to 3000 nm.

In the photo biological safety standard, hazard categories are defined as follows:

Radiance-based

• Blue Light	LB	300 - 700 nm
• Retinal Thermal	LR	380 - 1400 nm

Irradiance-based

• Actinic UV Skin & Eye	ES	200 - 400 nm
• Eye UVA	EUVA	315 - 400 nm
• Thermal skin*	EH	380 - 3000 nm
• Eye IR	EIR	780 - 3000 nm

* Thermal skin is not defined in IEC 62471 and hence cannot be classified in risk groups. The Fortimo LED module passes as 'no hazard during normal use' if one would rate it according IEC 60825-1 'Safety for laser products'.

Fortimo LED DLM Flex Gen2 gave the following results

The following should be taken into account:

- The effective radiance measurement for Blue Light (LB) modules is 'Low', meaning that the LED modules are categorized in Risk Group 1. For the 3000 lumen version the permitted exposure time for Blue Light radiance (relevant when looking into the source) is limited to 1 hour, while for the 1100 lumen version it is 3 hours. Because of the Law of Conservation of Radiance, integration of the LED module into a luminaire results in either the same radiance or a reduced radiance. Final assessment of the luminaire is recommended.
- The measured irradiance-based values (E) for the categorized hazards are all within the exempt group.
- In general the permitted exposure time for irradiance is limited when in the 'low', 'moderate' or 'high' risk group. Limiting the exposure time and/or the distance to the source can reduce the hazard level. However, for the measured LED modules no special precautions are necessary because they are ranked in the exempt group. Final assessment of the luminaire (including e.g. secondary optics) is recommended.

Chemical Compatibility

The Fortimo LED DLM Flex Gen2 makes use of LEDs containing a silver-finished (Ag) Lead frame. The lead frame finish is sensitive to pollution and or corrosion when exposed to Oxygen and certain Volatile Organic Components [VOCs]. Examples of VOCs are substances containing Sulfur or Chlorine. In that case parts of the lead frame may blacken, which will impair the lumen output or the color point of the LED light. Materials that are known to have a higher risk to be a source of Sulfur and Chlorine are for example rubbers used for cables & cable entries, sealing's or corrugated carton. Also do NOT use adhesives, cleaning agents, coatings containing suspect VOCs. Nor use the product in aggressive (corrosive) environments that may cause damage to the LED's.

We recommend ensuring that the direct environment of these LEDs in the luminaire does not contain materials that can be a source of Sulfur or Chlorine, for optimal reliability of the LED, LED module and/or LED luminaire. Furthermore, make sure that the products with these LEDs are not stored or used in vicinity of sources of Sulfur or Chlorine, and the production environment is also free of these materials. Also avoid cleaning of the LED products with these types of LEDs with abrasive substances, brushes or organic solvents like Acetone and TCE.

Applications of the product in industry and heavy traffic environment should be avoided in case of risk of ingress of Sulfur and Chlorine from the environment.

A list of chemicals, often found in electronics and construction materials for luminaires that should be avoided, is provided in the table below. Note that Philips does not warrant that this list is exhaustive since it is impossible to determine all chemicals that may affect LED performance. These chemicals may not be directly used in the final products but some of them may be used in intermediate manufacturing steps (e.g. cleaning agents). Consequently, trace amounts of these chemicals may remain on (sub) components, such as heat sinks. It is recommended to take precautions when designing your application.

In case of questions on compatibility of materials or applications of the product please contact your Philips representative for application support.

Chemical Name	Normally used as
Acetic acid	Acid
Hydrochloric acid	Acid
Nitric acid	Acid
Sulfuric acid	Acid
Ammonia	Alkali
Potassium hydroxide	Alkali
Sodium hydroxide	Alkali
Acetone	Solvent
Benzene	Solvent
Dichloromethane	Solvent
Gasoline	Solvent
MEK (Methyl Ethly Ketone)	Solvent
MIBK (Methyl Isobutyl Ketone)	Solvent
Mineral spirits (turpentine)	Solvent
Tetracholorometane	Solvent
Toluene	Solvent
Xylene	Solvent
Castor oil	Oil
Lard	Oil
Linseed oil	Oil
Petroleum	Oil
Silicone oil	Oil
Halogenated hydrocarbons (containing F,Cl,Br elements)	Misc
Rosin flux	Solder flux
Acrylic tape	Adhesive
Cyanoacrylate	Adhesive

Electromagnetic compatibility

Philips Fortimo LED DLM Flex Gen2 systems fulfill the requirements with regard to electromagnetic compatibility as laid down in European Norms EN 55015 and EN 55022, EN 61000-3-2 and EN 61547.

Humidity

Fortimo LED DLM Flex Gen2 modules and LED drivers can withstand a high humidity (60% rh) environment.

Exposure to direct sunlight

Exposure to direct sunlight during operation may have severe temperature or UV effects.
Where this situation is likely, extensive temperature testing is recommended.

Vibration and shocks

Shock resistance: 50 g @ 6 ms semi-sinusoidal.
Vibration resistance: sweep 50-150 Hz, one hour at resonance frequency (all 3 axes) without failure.

IP codes, dust and moisture protection

Fortimo LED DLM modules and LED drivers have no IP classification. The OEM is responsible for proper IP classification and approbation of the luminaire.

Philips Fortimo LED DLM Flex Gen2 systems are to be used for indoor applications

When used in a non-weather protected environment, additional measures shall be taken to protect the Fortimo LED DLM Flex Gen2 modules and LED drivers from water ingress.

Glow-wire test

Philips Fortimo LED DLM Flex Gen2 systems conform to the 960-degree glow-wire test. Reference test: according to additional national deviations for clause 13.3 (Annex 2c of EN 60598-1). An exception is made for France, where local regulations are more strict.

End-of-life behavior

Unlike typical conventional light sources, LEDs are not subject to sudden failure or burnout. There is no time at which the light source will cease to function. Instead, the performance of LEDs shows gradual degradation over time. When used according to specification, Fortimo LED DLM modules are predicted to deliver an average of 70% of their initial intensity after 60,000 hours of operation. The life of the system is therefore more dependent on the other electronic system components and soldering methods.
The LEDs in the Fortimo LED DLM Flex Gen2 module are connected such that if one LED fails, then the current is adjusted in order to give the same light output.

Contact details

Philips

Product information: www.Philips.com/Technology

Or contact your local Philips sales representative.

Partners for cooling solutions

Complementary heat sink partner	Website
Sunon	www.sunon.com
AVC	www.avc.com.tw
Nuventix	www.nuventix.com
Wisefull	www.wisefull.com
MechaTronix	www.mechatronix-asia.com

Partners for reflector solutions

Reflector partner	Website
Jordan Luxar	www.jordan-luxar.de
NATA	www.nata.cn
ACL	www.reflektor.de
Almeco	www.almecogroup.com
Widegerm	www.widegerm.com.hk

Partners for thermal interface materials

Thermal interface partners	Website
Laird Technologies	www.lairdtech.com
The Bergquist Company	www.bergquistcompany.com



© 2023 Signify Holding. All rights reserved. The information provided herein is subject to change, without notice. Signify does not give any representation or warranty as to the accuracy or completeness of the information included herein and shall not be liable for any action in reliance thereon. The information presented in this document is not intended as any commercial offer and does not form part of any quotation or contract, unless otherwise agreed by Signify.

Philips and the Philips Shield Emblem are registered trademarks of Koninklijke Philips N.V. All other trademarks are owned by Signify Holding or their respective owners.

3/2023
Data subject to change

www.philips.com/technology