PHILIPS

EcoAccent ST271T

6999448



EcoAccent - Enhance the Retail Experience

EcoAccent is the LED solution for shop targeting energy savings. With a system efficacy of 95 lm/W in average, delivering more than 40% energy efficient compared to CDM solution. EcoAccent helps save energy and at the same time provides excellent lighting for retail environment thus enhancing the retail experience. The option of different light distribution for Accent light and varity of lumen packs and colour temperatures makes it an ideal solution for retail lighting.

Benefits

- Plenty of choices in form factor, lumen output and optics
- Energy saving: more than 40% energy efficient compared to CDM solution
- 1 on 1 replacement over conventional CDM light

Applications

- Office
- Shop
- Hospitality
- Healthcare
- Industrial
- Public indoor space

Features

- System efficacy up to 95 lm/W
- CRI 80
- CRI 90 optional for 3000K (CrispWhite Tech)
- High reliability 30k hours
- To be used in Indoor Environment only

Versions



EcoAccent-Trackmounted
Black-ST271T

Dimensional drawing

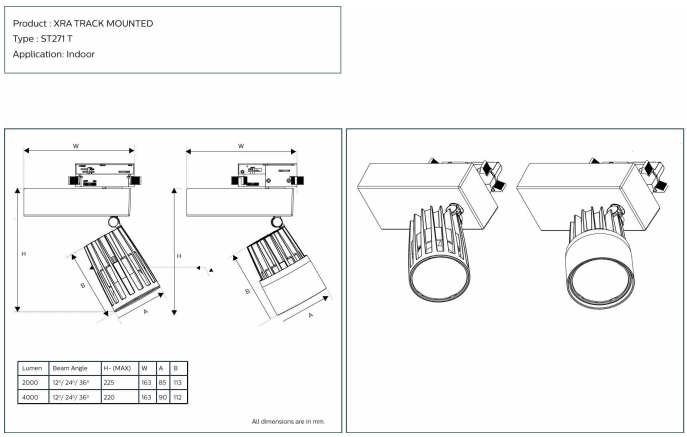

ST271T LED40/840 PSU-E MB 1C BK

General Information

Driver included	Yes

Light Technical

Luminous Efficacy (rated) (Nom)	100 lm/W
Color rendering index (CRI)	>80
Optic type	Beam angle 12 to 36°

Operating and Electrical

Input Voltage	240 V
Protection class IEC	Safety class II

Controls and Dimming

Dimmable	No

Mechanical and Housing

Ingress protection code	IP20 [Finger-protected]
Mech. impact protection code	IK02 [0.2 J standard]
Optical cover type	Aluminum and polycarbonate

Approval and Application

Flammability mark	For mounting on normally flammable surfaces
Ambient temperature range	0 to +45 °C

Light Technical

Order Code	Full Product Name	Luminous Flux	Correlated Color Temperature (Nom)	Beam angle of light source
919515810925	ST271T LED20/830 PSU-E NB 1C BK	2,000 lm	3000 K	12 degree(s)
919515810927	ST271T LED20/830 PSU-E WB 1C BK	2,000 lm	3000 K	36 degree(s)
919515810928	ST271T LED20/840 PSU-E NB 1C BK	2,000 lm	4000 K	12 degree(s)
919515810929	ST271T LED20/840 PSU-E MB 1C BK	2,000 lm	4000 K	24 degree(s)
919515810934	ST271T LED40/830 PSU-E NB 1C BK	4,000 lm	3000 K	12 degree(s)
919515810936	ST271T LED40/830 PSU-E WB 1C BK	4,000 lm	3000 K	36 degree(s)
919515810938	ST271T LED40/840 PSU-E MB 1C BK	4,000 lm	4000 K	24 degree(s)
919515810939	ST271T LED40/840 PSU-E WB 1C BK	4,000 lm	4000 K	36 degree(s)
919515810940	ST271T LED40/850 PSU-E NB 1C BK	4,000 lm	5000 K	12 degree(s)
919515811221	ST271T LED20/840 PSU-E MB 1C WH	2,000 lm	4000 K	24 degree(s)
919515811222	ST271T LED20/830 PSU-E MB 1C WH	2,000 lm	3000 K	24 degree(s)
919515811224	ST271T LED20/840 PSU-E WB 1C WH	2,000 lm	4000 K	36 degree(s)
919515811229	ST271T LED40/850 PSU-E MB 1C WH	4,000 lm	5000 K	24 degree(s)
919515811230	ST271T LED40/840 PSU-E MB 1C WH	4,000 lm	4000 K	24 degree(s)
919515811231	ST271T LED40/830 PSU-E MB 1C WH	4,000 lm	3000 K	24 degree(s)
919515811233	ST271T LED40/840 PSU-E WB 1C WH	4,000 lm	4000 K	36 degree(s)

Operating and Electrical

Order Code	Full Product Name	Power Consumption
919515810925	ST271T LED20/830 PSU-E NB 1C BK	22 W
919515810927	ST271T LED20/830 PSU-E WB 1C BK	22 W
919515810928	ST271T LED20/840 PSU-E NB 1C BK	22 W
919515810929	ST271T LED20/840 PSU-E MB 1C BK	22 W
919515810934	ST271T LED40/830 PSU-E NB 1C BK	42 W
919515810936	ST271T LED40/830 PSU-E WB 1C BK	42 W
919515810938	ST271T LED40/840 PSU-E MB 1C BK	42 W
919515810939	ST271T LED40/840 PSU-E WB 1C BK	42 W
919515810940	ST271T LED40/850 PSU-E NB 1C BK	42 W

Order Code	Full Product Name	Power Consumption
919515811221	ST271T LED20/840 PSU-E MB 1C WH	22 W
919515811222	ST271T LED20/830 PSU-E MB 1C WH	22 W
919515811224	ST271T LED20/840 PSU-E WB 1C WH	22 W
919515811229	ST271T LED40/850 PSU-E MB 1C WH	42 W
919515811230	ST271T LED40/840 PSU-E MB 1C WH	42 W
919515811231	ST271T LED40/830 PSU-E MB 1C WH	42 W
919515811233	ST271T LED40/840 PSU-E WB 1C WH	42 W

Mechanical and Housing

Order Code	Full Product Name	Housing Color
919515810925	ST271T LED20/830 PSU-E NB 1C BK	Black
919515810927	ST271T LED20/830 PSU-E WB 1C BK	Black
919515810928	ST271T LED20/840 PSU-E NB 1C BK	Black
919515810929	ST271T LED20/840 PSU-E MB 1C BK	Black
919515810934	ST271T LED40/830 PSU-E NB 1C BK	Black
919515810936	ST271T LED40/830 PSU-E WB 1C BK	Black
919515810938	ST271T LED40/840 PSU-E MB 1C BK	Black
919515810939	ST271T LED40/840 PSU-E WB 1C BK	Black
919515810940	ST271T LED40/850 PSU-E NB 1C BK	Black
919515811221	ST271T LED20/840 PSU-E MB 1C WH	White
919515811222	ST271T LED20/830 PSU-E MB 1C WH	White
919515811224	ST271T LED20/840 PSU-E WB 1C WH	White
919515811229	ST271T LED40/850 PSU-E MB 1C WH	White
919515811230	ST271T LED40/840 PSU-E MB 1C WH	White
919515811231	ST271T LED40/830 PSU-E MB 1C WH	White
919515811233	ST271T LED40/840 PSU-E WB 1C WH	White

© 2026 Signify Holding. All rights reserved. The information provided herein is subject to change, without notice. Signify does not give any representation or warranty as to the accuracy or completeness of the information included herein and shall not be liable for any action in reliance thereon. The information presented in this document is not intended as any commercial offer and does not form part of any quotation or contract, unless otherwise agreed by Signify. Philips and the Philips Shield Emblem are registered trademarks of Koninklijke Philips N.V.