PHILIPS

PrimaVision Xtreme for CPO

DPVCPOXT



HID-PrimaVision Xtreme for CPO - Xtreme drivers for the highest reliability

Highly reliable electronic drivers for CPO lamps; designed to save energy by offering better light efficiency than magnetic drivers and to reduce maintenance costs thanks to 80,000-hour lifetime and integrated lightning protection

Benefits

- Together with the CPO lamp the driver creates the most efficient white-light system in the industry in its power range
- Up to 15% energy saving due to the high driver efficiency (92%) and better wattage control at overvoltage (compared
- ith magnetic ballasts)
- Minimizes maintenance cost due to the Xtreme lifetime of 80,000 hours and integrated lightning protection

Applications

- Residential lighting
- City beautification
- Road/highway lighting

Features

- Xtreme long lifetime of 80,000 hours, with minimum 90% survival at Tc = 80 °C)
- Xtreme lightning protection 10 kV/5 kA
- Xtreme protection against humidity and vibration
- Better lighting efficiency than magnetic ballasts
- Accurate lamp power stabilization of 95-97% over wide mains-voltage range of 180-300 V

Versions



GPPR IPVCPOXt PHL 0012

Dimensional drawing

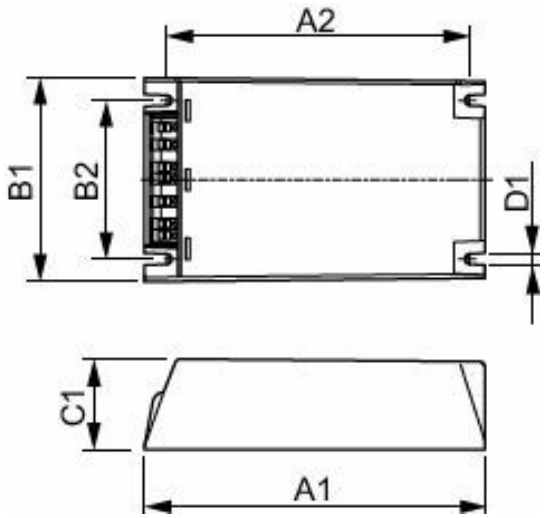

Product	D1	C1	A1	A2	B1	B2
HID-PV Xt 140 CPO Q 208-277V	4.5 mm	40.0 mm	150.0 mm	133.6 mm	90.0 mm	70.0 mm
HID-PV Xt 60 CPO Q 208-277V	4.5 mm	40.0 mm	150.0 mm	133.6 mm	90.0 mm	70.0 mm
HID-PV Xt 90 CPO Q 208-277V	4.5 mm	40.0 mm	150.0 mm	133.6 mm	90.0 mm	70.0 mm

Operating and Electrical

Input Voltage	208-240-277 V
Line Frequency	50 to 60 Hz
Input Frequency	50 to 60 Hz

Mechanical and Housing

Housing	Q

Operating and Electrical

Order Code	Full Product Name	Number of Products on MCB (16A Type B) (Nom)
913700685466	HID-PV Xt 60 CPO Q 208-277V	11
913700685566	HID-PV Xt 90 CPO Q 208-277V	5
913700685666	HID-PV Xt 140 CPO Q 208-277V	5

© 2026 Signify Holding. All rights reserved. The information provided herein is subject to change, without notice. Signify does not give any representation or warranty as to the accuracy or completeness of the information included herein and shall not be liable for any action in reliance thereon. The information presented in this document is not intended as any commercial offer and does not form part of any quotation or contract, unless otherwise agreed by Signify. Philips and the Philips Shield Emblem are registered trademarks of Koninklijke Philips N.V.