PHILIPS

**RS378B P42 930 PSU-E MB M102**

911401721652



# Greenspace Flex, 42 W, 930 warm white, 24°, IP20 | Finger-protected

GreenSpace Flex is performance portfolio dedicated to Hospitality segment for GC/GM countries. With modular design concept, the light engines and different trims could have multiply of combination to satisfy diversified customer's requirement.

## General Information

| | |
|---|---|
| Number of gear units | 1 unit |
| Driver included | Yes |
| Light source engine type | LED |
| Value ladder | Performance |
| Warranty period | 3 years |

## Light Technical

| | |
|---|---|
| Luminous Flux | 2,350 lm |
| Correlated Color Temperature (Nom) | 3000 K |
| Luminous Efficacy (rated) (Nom) | 71 lm/W |
| Color rendering index (CRI) | >90 |
| Beam angle of light source | - degree(s) |
| Light source color | 930 warm white |
| Optic type | - |
| Luminaire light beam spread | 24° |

## Operating and Electrical

| | |
|---|---|
| Input Voltage | 220-240 V |
| Line Frequency | 50 or 60 Hz |
| Average CLO power consumption | 3170 W |
| Power Consumption | 42 W |
| Power Factor (Fraction) | 0.9 |
| Connection | External connector |
| Cable | - |
| Number of products on MCB of 16 A type B | - |
| Suitable for random switching | No |
| Protection class IEC | Safety class II |

## Controls and Dimming

| | |
|---|---|
| Dimmable | No |
| Driver/power unit/transformer | Electronic transformer |
| Control interface | - |
| Constant light output | No |
| Maximum dim level | Not applicable |

## Mechanical and Housing

| | |
|---|---|
| Housing Material | Aluminum Alloy |
| Reflector material | - |
| Optic material | Polymethyl methacrylate |
| Optical cover material | Polymethyl methacrylate |
| Fixation material | Aluminum |
| Housing Color | Grey |
| Optical cover finish | Opal |
| Overall height | 116 mm |
| Overall diameter | 102 mm |
| Ingress protection code | IP20 [Finger-protected] |
| Mech. impact protection code | IK04 [0.5 J standard plus] |
| Optical cover type | PMMA |
| Net Weight (Piece) | 0.940 kg |

## Approval and Application

| | |
|---|---|
| Glow-wire test | Temperature 600 °C, duration 30 s |
| Flammability mark | - |
| CE mark | Yes |
| ENEC mark | - |
| EU RoHS compliant | Yes |
| Ambient temperature range | -20 to +45 °C |

## Initial Performance (IEC Compliant)

| | |
|---|---|
| Luminous flux tolerance | -10% / +10% |
| Initial chromaticity | SDCM<3 |
| Power consumption tolerance | +/-10% |

## Over Time Performance (IEC Compliant)

| | |
|---|---|
| Median useful life L80B50 | 50,000 hour(s) |

## Product Data

| | |
|---|---|
| Order product name | RS378B P42 930 PSU-E MB M102 |
| Full product name | RS378B P42 930 PSU-E MB M102 |
| Full product code | 911401721652 |
| Order code | 911401721652 |
| Material Nr. (12NC) | 911401721652 |
| Numerator - Quantity Per Pack | 1 |
| Numerator - Packs per outer box | 12 |

## Dimensional drawing

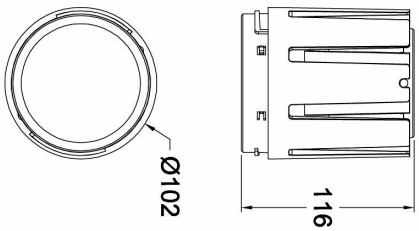


| Modular Type | D, mm | H, mm |
|---|---|---|
| RS378B P6/P11 M55 | 55 | 49 |
| RS378B P15 M55 | 55 | 49 |
| RS378B P24 M70 | 70 | 90 |
| RS378B P33 M87 | 87 | 107 |
| RS378B P42 M102 | 102 | 116 |

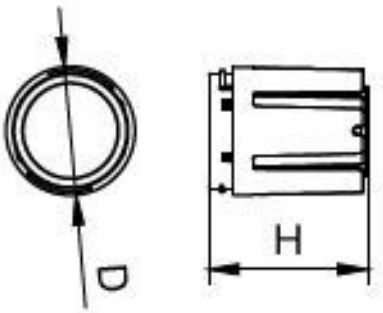


## Related Documents

| Documents and certificates | Document Name | Download |
|---|---|---|
| Installation Instructions | PHL_Greenspace_Flex_Modular-INI.pdf | Download |
| Installation Instructions | MI_GreenSpace_Flex_RS378.pdf | Download |

© 2026 Signify Holding. All rights reserved. The information provided herein is subject to change, without notice. Signify does not give any representation or warranty as to the accuracy or completeness of the information included herein and shall not be liable for any action in reliance thereon. The information presented in this document is not intended as any commercial offer and does not form part of any quotation or contract, unless otherwise agreed by Signify. Philips and the Philips Shield Emblem are registered trademarks of Koninklijke Philips N.V.