PHILIPS

Ledinaire Waterproof Tube Housing

7873432



Ledinaire waterproof tube housing - For your everyday lighting jobs, easy to choose from the shelve and to install with LED tube of your choice

The Ledinaire waterpprof (WT050C) range contains a selection of empty, waterproof housings, that can cater for LED tubes of your choice. It comes with the high Philips quality levels at a competitive price. Ledinaire enables, simple and quick installation, with a choice of single and double tube installations.

Benefits

- Philips quality and reliability
- Easy to use with Philips LEDtubes
- Robust for water- and dustproof applications

Applications

- Choose an item.
- Covered car parks
- Industrial halls (up to 4 m in height)
- Storage rooms

Features

- Robust (IK08) and waterproof (IP65) luminaire
- Multiple lengths and configurations available
- Includes fuse for safe and easy operation

Versions



Ledinaire Waterproof Tube Housing



Ledinaire Waterproof Tube Housing



Ledinaire waterproof empty housing, L600



Ledinaire waterproof empty housing, L600

Dimensional drawing

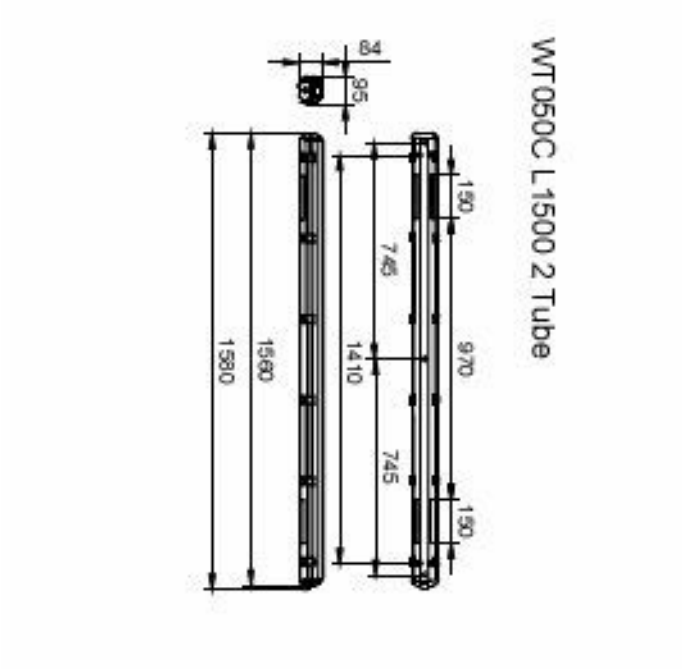

WT050C 2xTLED WR L1500

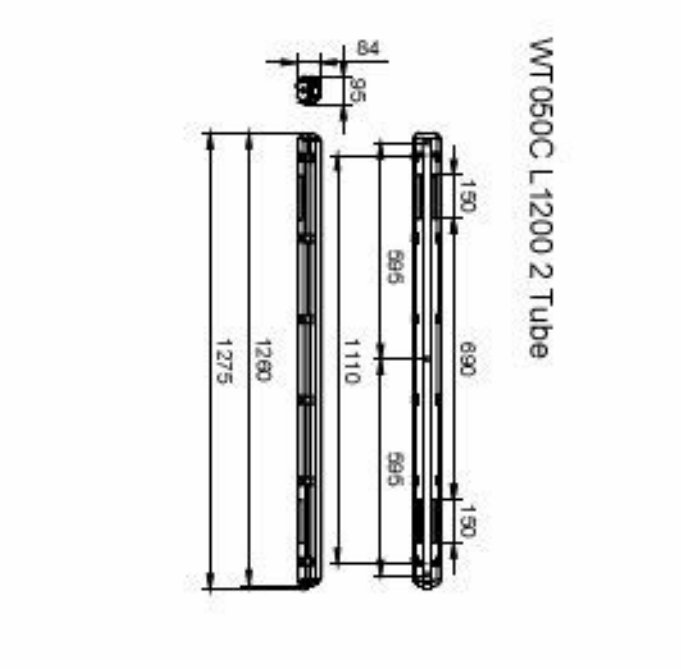

WT050C 2xTLED WR L1200

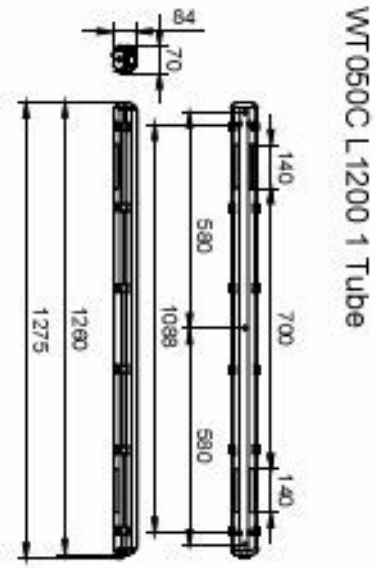

WT050C 1xTLED WR L1200

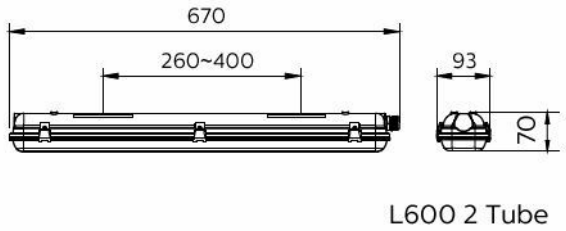

WT050C 2xTLED L600

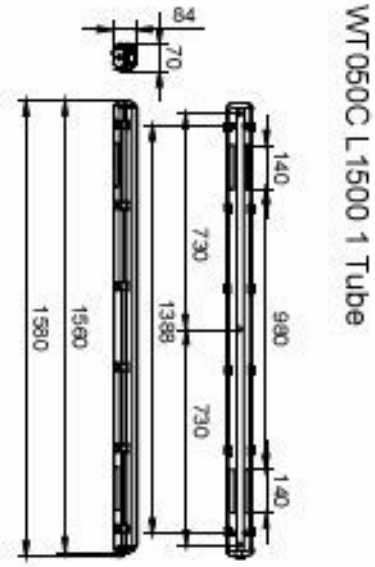

WT050C 1xTLED L600

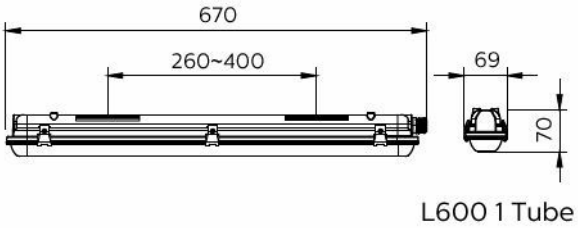

Dimensional drawing ledinaire waterproof tube housing

Product details



Ledinaire waterproof WT050C WR L1200 Twin



Ledinaire waterproof WT050C WR L1500 Twin



Ledinaire waterproof WT050C WR L1500 single



Ledinaire waterproof WT050C WR L1500 single



Ledinaire waterproof WT050C WR L1500 Twin



Ledinaire waterproof WT050C WR L1200 Twin



Ledinaire waterproof WT050C WR L1200 single



Ledinaire waterproof WT050C WR L1500 single



Ledinaire waterproof WT050C WR L1200 single



Ledinaire waterproof WT050C WR L1200 single



Ledinaire waterproof WT050C WR L1500 single



Ledinaire waterproof WT050C WR L1500 Twin



Ledinaire waterproof WT050C WR L1200 Twin

Light Technical

Color rendering index (CRI)	-

Operating and Electrical

Input Voltage	220 to 240 V
Line Frequency	50 or 60 Hz
Protection class IEC	Safety class II

Mechanical and Housing

Ingress protection code	IP65 [Dust penetration-protected, jet-proof]
Mech. impact protection code	IK08 [5 J vandal-protected]

Approval and Application

CE mark	Yes

© 2026 Signify Holding. All rights reserved. The information provided herein is subject to change, without notice. Signify does not give any representation or warranty as to the accuracy or completeness of the information included herein and shall not be liable for any action in reliance thereon. The information presented in this document is not intended as any commercial offer and does not form part of any quotation or contract, unless otherwise agreed by Signify. Philips and the Philips Shield Emblem are registered trademarks of Koninklijke Philips N.V.