PHILIPS

59443 Plus MESON 080
7W 40K WH KR

929003304508



Meson Downlight, 7 W, 550 lm, 4000 K, Wide beam, White

Plastic, White, Power supply unit, 550 lm, 7 W, 78 lm/W, 4000 K, (0.3818, 0.3797) 6SDCM, Wide beam, Opal, Polycarbonate, IP20 | Finger-protected, IK03 | 0.3 J, Safety class II, Flying leads/wires

General Information

Light source replaceable	No
Number of gear units	1 unit
Driver included	Yes
Switching Cycle	7,500
Warranty period	1 years

Light Technical

Luminous Flux	550 lm
Correlated Color Temperature (Nom)	4000 K
Luminous Efficacy (rated) (Nom)	78 lm/W
Color rendering index (CRI)	80
Light source color	840 neutral white
Optic type	Wide beam
Luminaire light beam spread	110°
Photobiological safety according to EN 62471	RG0

Operating and Electrical

Input Voltage	220 to 240 V
Input Frequency	50 or 60 Hz

Inrush current	5 A
Inrush time	0.17 ms
Power Consumption	7 W
Power Factor (Fraction)	0.5
Connection	Flying leads/wires
Cable	Cable without plug 2-pole
Number of products on MCB of 16 A type B	190
Suitable for random switching	Not applicable
Protection class IEC	Safety class II

Controls and Dimming

Dimmable	No
Driver/power unit/transformer	Power supply unit
Constant light output	No

Mechanical and Housing

Housing Material	Plastic
Reflector material	-
Optic material	Polycarbonate
Optical cover material	Polycarbonate
Fixation material	Steel
Housing Color	White
Optical cover finish	Opal
Overall height	45.5 mm
Overall diameter	105 mm
Ingress protection code	IP20 [Finger-protected]
Mech. impact protection code	IK03 [0.3 J]
Net Weight (Piece)	0.050 kg

Approval and Application

Insulation Coverage Rating	Non IC Rating
Glow-wire test	Temperature 650 °C, duration 30 s
Flammability mark	For mounting on normally flammable surfaces
CE mark	Yes
EU RoHS compliant	Yes
EyeComfort	Yes
Ambient temperature range	-20 to +40 °C

Initial Performance (IEC Compliant)

Luminous flux tolerance	+15%/-5%
Initial chromaticity	(0.3818, 0.3797) 6SDCM
Power consumption tolerance	+/-10%

Over Time Performance (IEC Compliant)

Driver failure rate at 5000 h	5
Median useful life L70B50	15,000 hour(s)

Product Data

Order product name	59443 Plus MESON 080 7W 40K WH KR
Full product name	59443 Plus MESON 080 7W 40K WH KR
Full product code	872016924981300
Order code	929003304508
Material Nr. (12NC)	929003304508
Numerator - Quantity Per Pack	1
EAN/UPC - Product/Case	8720169249813
Numerator - Packs per outer box	12
EAN/UPC - Case	8720169249820

Dimensional drawing

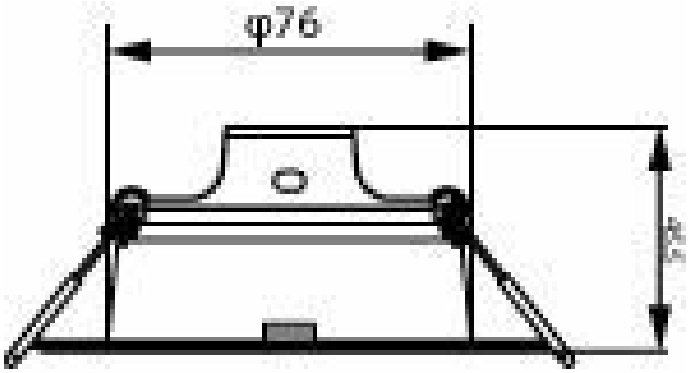

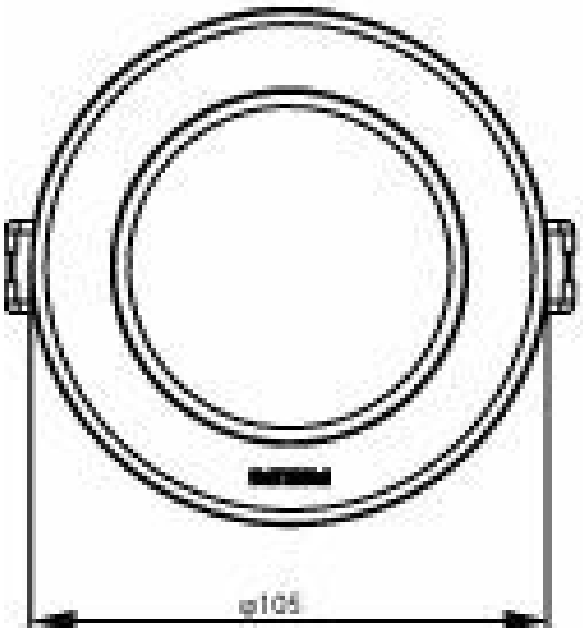

Photometric data

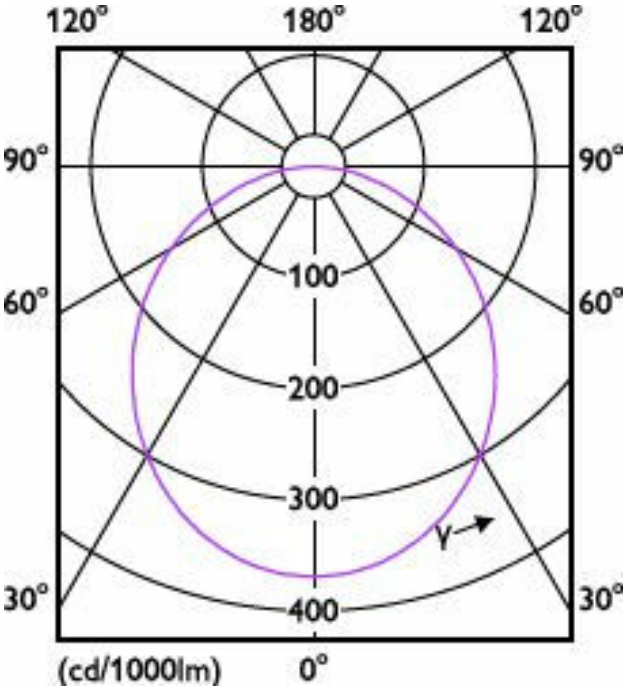

Light Distribution Diagram - 59443 Plus MESON 080 7W 40K WH KR

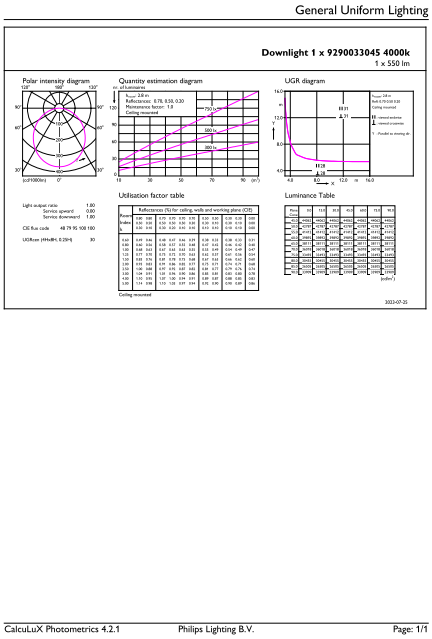

General uniform lighting - 59443 Plus MESON 080 7W 40K WH KR

Related Documents

Documents and certificates	Document Name	Download
Environmental Product Declaration	Philips-Meson-downlight-Meson-3-4inch-Ref-929003285302-EPD.pdf	Download

Photometry and lighting design	Document Name	Download
IES File	59443_Plus_MESON_080_7W_40K_WH_KR-IES.ies	Download

© 2026 Signify Holding. All rights reserved. The information provided herein is subject to change, without notice. Signify does not give any representation or warranty as to the accuracy or completeness of the information included herein and shall not be liable for any action in reliance thereon. The information presented in this document is not intended as any commercial offer and does not form part of any quotation or contract, unless otherwise agreed by Signify. Philips and the Philips Shield Emblem are registered trademarks of Koninklijke Philips N.V.