PHILIPS

RS350 G2 RC Sq L100 *2 30K 36D 2H

929003219310



Deep Recessed Spotlight, 4000 lm, 3000 K, Beam angle 36°, Grey

Aluminum die-cast, Grey, 4000 lm, 105 lm/W, 3000 K, ((, 0.4341 , , 0.3993)) 5SDCM, Beam angle 36°, Clear, Polycarbonate, IP20 | Finger-protected, IK03 | 0.3 J, Safety class III, Flying leads/wires

General Information

Light source replaceable	No
Driver included	No
Switching Cycle	15,000
Lighting Technology	LED
Warranty period	1 years

Light Technical

Luminous Flux	4,000 lm
Correlated Color Temperature (Nom)	3000 K
Luminous Efficacy (rated) (Nom)	105 lm/W
Color rendering index (CRI)	90
Number of light sources	2
Light source color	930 warm white
Optic type	Beam angle 36°
Luminaire light beam spread	36° × 2°

Operating and Electrical

Input Voltage	Max 33-40 V
Line Frequency	- Hz
Input Frequency	- Hz
Power Factor (Fraction)	-
Connection	Flying leads/wires
Power Consumption (multiple heads)	19 W*2 W
Suitable for random switching	No
Protection class IEC	Safety class III

Controls and Dimming

Dimmable	No
Constant light output	No

Mechanical and Housing

Housing Material	Aluminum die-cast
Reflector material	Polycarbonate aluminum coated
Optic material	Polycarbonate
Optical cover material	Polycarbonate
Fixation material	Steel
Housing Color	Grey
Optical cover finish	Clear
Overall length	200 mm
Overall width	106 mm
Overall height	119 mm
Dimensions (Height x Width x Depth)	119 x 106 x 200 mm
Ingress protection code	IP20 [Finger-protected]
Mech. impact protection code	IK03 [0.3 J]
Net Weight (Piece)	0.930 kg

Approval and Application

Glow-wire test	Temperature 650 °C, duration 30 s
Flammability mark	For mounting on normally flammable surfaces
EU RoHS compliant	Yes
EyeComfort	Yes
Ambient temperature range	-20 to +40 °C

Initial Performance (IEC Compliant)

Initial chromaticity	《 , 0.4341 ， , 0.3993 》5SDCM

Over Time Performance (IEC Compliant)

Median useful life L70B50	25,000 hour(s)

Product Data

Order product name	RS350 G2 RC Sq L100 *2 30K 36D 2H
Full product name	RS350 G2 RC Sq L100 *2 30K 36D 2H
Full product code	692234195846500
Order code	929003219310
Material Nr. (12NC)	929003219310
Numerator - Quantity Per Pack	1
EAN/UPC - Product/Case	6922341958465
Numerator - Packs per outer box	6
EAN/UPC - Case	6922341958472

Dimensional drawing

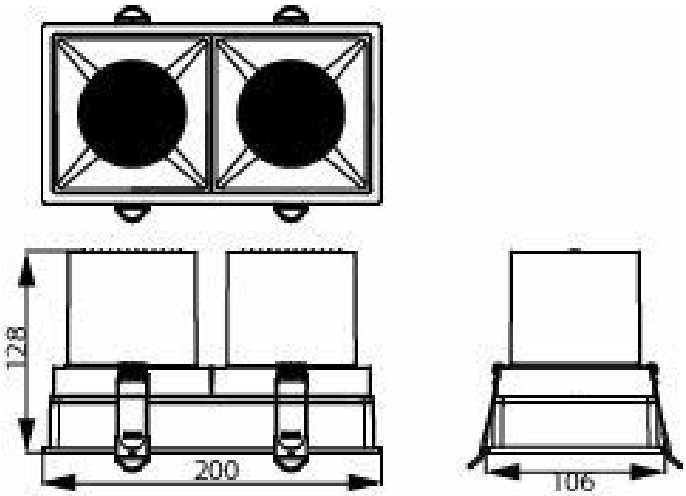

Photometric data

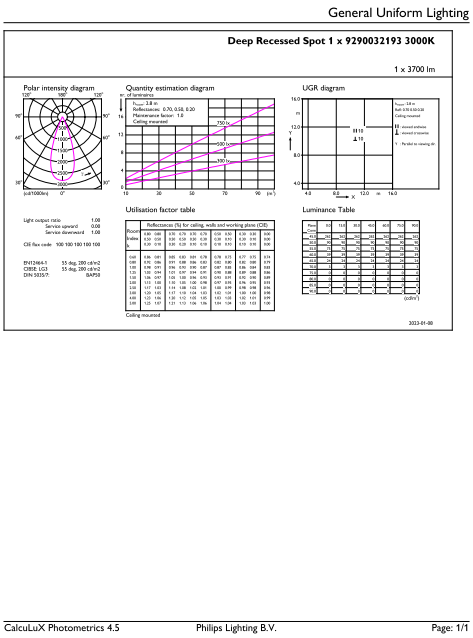
General Uniform Lighting

Deep Recessed Spot 1 x 9290032193 3000K

1 x 3700 lm

Polar intensity diagram

Quantity estimation diagram

UGR diagram

Utilisation factor table

Luminance Table

CalcuLuX Photometrics 4.5 Philips Lighting B.V. Page: 1/1

General uniform lighting - RS350 G2 RC Sq L100 *2 30K 36D 2H

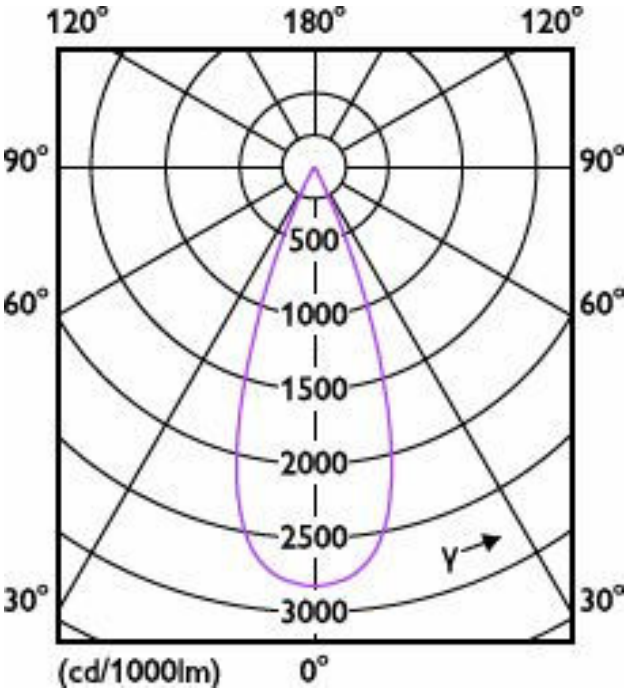

Light Distribution Diagram - RS350 G2 RC Sq L100 *2 30K 36D 2H

Related Documents

Photometry and lighting design	Document Name	Download
IES File	RS350_G2_RC_SQ_L100x2_30K_36D_2H-IES.ies	Download

© 2026 Signify Holding. All rights reserved. The information provided herein is subject to change, without notice. Signify does not give any representation or warranty as to the accuracy or completeness of the information included herein and shall not be liable for any action in reliance thereon. The information presented in this document is not intended as any commercial offer and does not form part of any quotation or contract, unless otherwise agreed by Signify. Philips and the Philips Shield Emblem are registered trademarks of Koninklijke Philips N.V.