PHILIPS

DN058C LED20/830
110-240V D275 RD

911401803988



SmartBright Downlight DN058 WV, 22 W, 1860 lm, 3000 K, Symmetric 110^0, Matte, IP20 | Finger-protected

SmartBright downlight DN058 WV series products offer reliable lighting performance with long lifetime and meet all the IEC safety regulation requirements. Products have multiple installation, including both recessed and surface mount. Products also have Different shapes as options, round and square shape can meet different customer's requirement. Products have three CCT options with different cut out solutions. Products have no harm to eyes and give eye comfortable experience.

General Information

Number of gear units	1 unit
Gear	EB [Electronic]
Driver included	Yes
Light source engine type	LED
Value ladder	Value
Warranty period	1 years

Light Technical

Luminous Flux	1,860 lm
Correlated Color Temperature (Nom)	3000 K
Luminous Efficacy (rated) (Nom)	85 lm/W
Color rendering index (CRI)	>80
Number of light sources	1
Beam angle of light source	110 degree(s)
Light source color	830 warm white
Optic type	Symmetric 110^0
Luminaire light beam spread	110°
Unified glare rating CEN	30
Effective projected area	0.75 m^2

Operating and Electrical

Input Voltage	110 to 240 V
Line Frequency	50 or 60 Hz

Inrush current	20.2 A
Inrush time	0.19 ms
Power Consumption	22 W
Power Factor (Fraction)	0.5
Connection	Flying leads/wires
Cable	2×0.75mm²
Number of products on MCB of 16 A type B	35
Suitable for random switching	No
Protection class IEC	Safety class II

Controls and Dimming

Dimmable	No
Control interface	-
Maximum dim level	Not applicable

Mechanical and Housing

Housing Material	Polypropylene
Reflector material	-
Optic material	Polystyrene
Optical cover material	Polystyrene
Housing Color	White RAL 9003
Mounting device	Mounting bracket
Optical cover finish	Matte
Overall height	35 mm
Overall diameter	295 mm
Ingress protection code	IP20 [Finger-protected]
Mech. impact protection code	IK03 [0.3 J]
Optical cover type	PS
Net Weight (Piece)	0.360 kg

Approval and Application

Glow-wire test	Temperature 650 °C, duration 30 s
Flammability mark	For mounting on normally flammable surfaces
CE mark	No
ENEC mark	-
Photobiological risk	Photobiological risk group 0 @200mm to EN62778
Photobiological risk specification	0.2 m
EU RoHS compliant	Yes
Performance ambient temperature Tq	25 °C
Ambient temperature range	-20 to +40 °C

Initial Performance (IEC Compliant)

Luminous flux tolerance	-10%,+15%
Initial chromaticity	(0.43,0.40) SDCM≤6
Power consumption tolerance	+/-10%

Product Data

Order product name	DN058C LED20/830 110-240V D275 RD
Full product name	DN058C LED20/830 110-240V D275 RD
Full product code	872110331842899
Order code	911401803988
Material Nr. (12NC)	911401803988
Numerator - Quantity Per Pack	1
EAN/UPC - Product/Case	8721103318428
Numerator - Packs per outer box	10
EAN/UPC - Case	8721103319296

Dimensional drawing

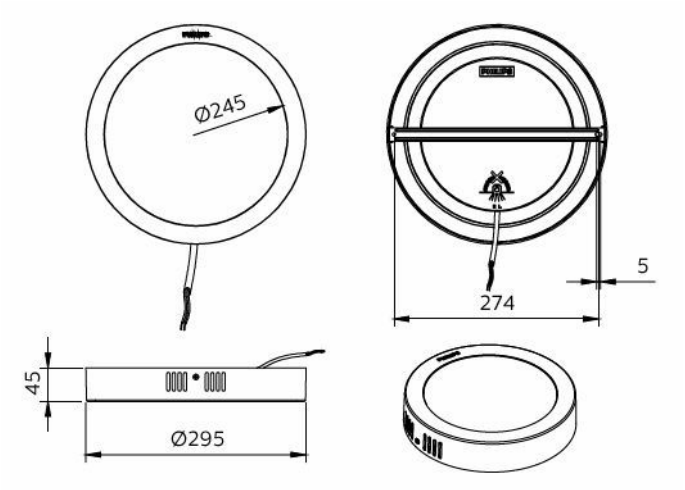

© 2026 Signify Holding. All rights reserved. The information provided herein is subject to change, without notice. Signify does not give any representation or warranty as to the accuracy or completeness of the information included herein and shall not be liable for any action in reliance thereon. The information presented in this document is not intended as any commercial offer and does not form part of any quotation or contract, unless otherwise agreed by Signify. Philips and the Philips Shield Emblem are registered trademarks of Koninklijke Philips N.V.