PHILIPS

RC132V G6 36S/840 PSU W60L60 OC BN

911401800687



Service tag

CoreLine Panel gen6, (in brown Eco Packaging), 26 W, 600x600 mm, VPC, 3600 lm, 4000 K, UGR19

(in brown Eco Packaging), 600x600 mm, Visible profile ceiling version, Steel, White, Signal white (RAL9003), Power supply unit external (On/Off), 3600 lm, 26 W, 140 lm/W, 4000 K, (0.38, 0.38) SDCM ≤3, UGR19, Beam angle 90°, Microprismatic lens, Polystyrene, IP20/40 | Finger-protected;Wire-protected, IK02 | 0.2 J standard, Safety class II, 2×0.75mm², Flying leads/ wires, SC | Safety cable

General Information

Number of gear units	1 unit
Driver included	Yes
Sustainability rating	Unclassified
Service tag	Yes
Value ladder	Performance
Warranty period	5 years

Light Technical

Luminous Flux	3,600 lm
Correlated Color Temperature (Nom)	4000 K
Luminous Efficacy (rated) (Nom)	140 lm/W
Color rendering index (CRI)	>80
Beam angle of light source	90 degree(s)
Light source color	840 neutral white
Optic type	Beam angle 90°
Luminaire light beam spread	90°
Unified glare rating CEN	19

Operating and Electrical

Input Voltage	220 to 240 V
Line Frequency	50 or 60 Hz
Inrush current	16 A
Inrush time	0.2 ms
Power Consumption	26 W
Power Factor (Fraction)	0.9
Connection	Flying leads/wires
Cable	2×0.75mm²
Number of products on MCB of 16 A type B	30
Suitable for random switching	Yes
Protection class IEC	Safety class II
Total harmonic distortion	20 %

Controls and Dimming

Dimmable	No
Driver/power unit/transformer	Power supply unit external (On/Off)
Control interface	-
Constant light output	No
Maximum dim level	Not applicable

Mechanical and Housing

Housing Material	Steel
Reflector material	Acrylate
Optic material	Polystyrene
Optical cover material	Polystyrene
Fixation material	-
Housing Color	White
Optical cover finish	Microprismatic lens
Overall length	595 mm
Overall width	595 mm
Overall height	61 mm
Dimensions (Height x Width x Depth)	61 x 595 x 595 mm
Compatible ceiling or ceiling installation accessory type	Visible profile ceiling version
Ingress protection code	IP20/40 [Finger-protected;Wire-protected]
Mech. impact protection code	IK02 [0.2 J standard]
Safety device	SC [Safety cable]
Net Weight (Piece)	2.100 kg

Emergency Operation

Central Emergency	No

Approval and Application

Glow-wire test	Temperature 650 °C, duration 30 s
Flammability mark	For mounting on normally flammable surfaces
CE mark	Yes
ENEC mark	ENEC mark
Photobiological risk	Photobiological risk group 0 @200mm to EN62778
Photobiological risk specification	0.2 m
EU RoHS compliant	Yes
Performance ambient temperature Tq	25 °C
Flickering value (PstLM) - Flickering value as per EN 61000-3-3	1
Stroboscopic effect visibility measure (SVM)	0.4
Ambient temperature range	-10 to +35 °C

Initial Performance (IEC Compliant)

Luminous flux tolerance	-10% / +10%
Initial chromaticity	(0.38, 0.38) SDCM ≤3
Power consumption tolerance	+/-10%

Over Time Performance (IEC Compliant)

Control gear failure rate at median useful life 50000 h	5 %
Lumen maintenance (EN-IEC 62722-2-1) at median useful life* 50000 h	L90
Lumen maintenance (EN-IEC 62722-2-1) at median useful life* 100000 h	L80

Sustainability Data

Repair class	Repair Class D, this product is not designed to be repaired.
Embedded carbon (A1-A3)	24.6 kg CO_2e
Product non-virgin material ratio	10.1 %
Recyclable content ratio of the finished product	47.9 %
GWP total B6 (kg CO2eq) Declared Unit	Please calculate using your local energy mix value: Power Declared Unit (kW) * Service life (hrs) Declared Unit * Energy mix (kg CO2eq / kwh)
GWP total B6 (kg CO2eq) Functional Unit	Please calculate using your local energy mix value: Power Declared Unit (kW) * 1000 (lm) /lumen output (lm) Declared Unit * 35000 (hrs) * Energy mix (kg CO2 eq / kwh)
Non-virgin material ratio of the packaging	Cardboard > 80% recycled
Packaging Recyclable content ratio	Cardboard recycling rate > 80%
Packaging Material	Cardboard

Product Data

Order product name	RC132V G6 36S/840 PSU W60L60 OC BN
Full product name	RC132V G6 36S/840 PSU W60L60 OC BN
Full product code	872016974987099
Order code	911401800687
Material Nr. (12NC)	911401800687
Numerator - Quantity Per Pack	1
EAN/UPC - Product/Case	8720169749870
Numerator - Packs per outer box	4
EAN/UPC - Case	8720169750135

Dimensional drawing

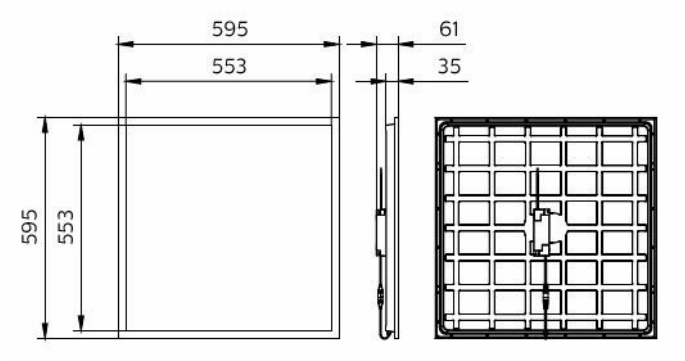

Polar normal diagrams

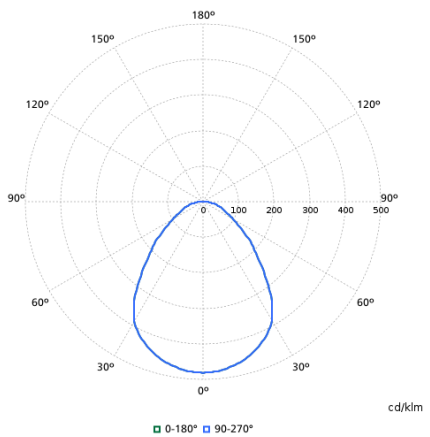

Compatible Accesories

Accessory Image	Accessory Code	Accessory Name	Website
	911401807787	RC159Z SMB W60L60	Product Website
	911401808087	RC059Z SMB W60L60	Product Website
	911401809187	RC159Z Safety Cable	Product Website
	911401809287	RC159Z Plaster Ceiling SMB-PLC	Product Website
	911401809487	RC159Z Suspension set SME-3 WH	Product Website
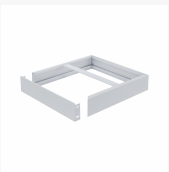	911401870988	RC159Z SMB W60L60 PREF	Product Website
	911401888587	RC159Z CPC bracket kit	Product Website

Accessory Image	Accessory Code	Accessory Name	Website
	912401483525	RC159Z Deco Square W60L60 (5pcs)	Product Website
	912401483526	RC159Z Deco Double Square W60L60 (5pcs)	Product Website
	912401483527	RC159Z Deco Double Circle W60L60 (5pcs)	Product Website

Related Documents

Documents and certificates	Document Name	Download
Tender text	Tender_Text_911401800687_en_AA.txt	Download
Installation Instructions	CoreLine-panel-G6-Installation-Instructions-RC132V-BN-v2.pdf	Download
Environmental Product Declaration	EPD-CoreLine-Panel-gen6-RC132V-W60L60-Ref-911401890585.pdf	Download

Photometry and lighting design	Document Name	Download
IES File	rc132v-g6-36s-840-psu-w60l60-oc-bn-911401800687.ies	Download
LDT File	rc132v-g6-36s-840-psu-w60l60-oc-bn-911401800687.ldt	Download
ROLF File	rc132v-g6-36s-840-psu-w60l60-oc-bn-911401800687.rolfz	Download
ULD File	rc132v-g6-36s-840-psu-w60l60-oc-bn-911401800687.uld	Download
Revit file	rc132v-g6-36s-840-psu-w60l60-oc-bn-911401800687.zip	Download

© 2026 Signify Holding. All rights reserved. The information provided herein is subject to change, without notice. Signify does not give any representation or warranty as to the accuracy or completeness of the information included herein and shall not be liable for any action in reliance thereon. The information presented in this document is not intended as any commercial offer and does not form part of any quotation or contract, unless otherwise agreed by Signify. Philips and the Philips Shield Emblem are registered trademarks of Koninklijke Philips N.V.