PHILIPS

Actinic BL TL-E

XUVATLE



Actinic BL TL-E – circular for design freedom

With an optimized spectrum matching the eye sensitivity of the housefly, Actinic BL TL(-K)/TL-D(-K)/TL-E/PL-S and PL-L lamps are perfect for attracting insects. They have virtually no UV-B output, and so are perfectly safe. What's more, with the lowest mercury content in the industry and being 100% lead-free, these lamps represent a very good environmental choice. Furthermore, the availability of a wide range of form factors (straight (T5, T8, T12), circular (TL-E) and compact (PL-S/PL-L)) and wattages enables you to make all kinds of designs for your electronic fly killers.

Benefits

- Perfectly matches the eye sensitivity of houseflies and in this way attracts more insects
- Safe for use
- Good environmental choice
- Design freedom

Applications

- Insect traps, Electronic Fly Killers (EFKs)

Features

- Emits long-wave UV-A radiation in the 350 - 400 nm range
- UV-B/UV-A ratio less than 0.1% (UV-B: 280 - 315 nm)
- 100% lead-free

- Low mercury content
- Circular
- A lamp breaking is extremely unlikely to have any impact on your health. If a lamp breaks, ventilate the room for 30 minutes and remove the parts, preferably with gloves. Put them in a sealed plastic bag and take it to your local waste facilities for recycling. Do not use a vacuum cleaner.

Versions



XPPR_XURTLE_0001-Product photo

Dimensional drawing

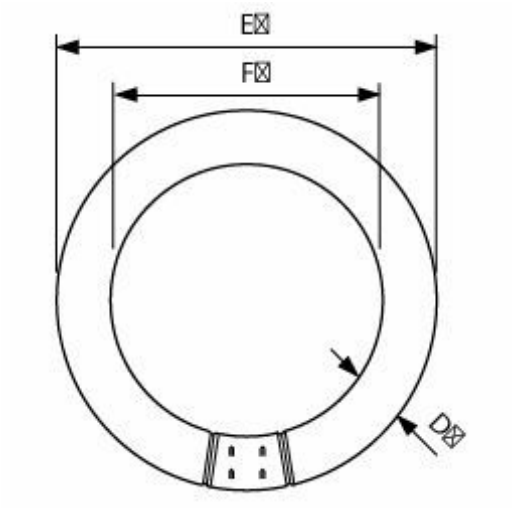

Product	D (max)	D (min)	F (max)	F (min)	E (min)	E (max)
Actinic BL TL-E 22W/10 1CT/20	30.9 mm	26.2 mm	155.6 mm	149.1 mm	205.0 mm	213.5 mm

General Information

Cap-Base	G10q

Light Technical

Color Code	10
Color Designation	Ultra Violet A

Operating and Electrical

Power Consumption	22 W
Lamp Current (Nom)	0.4 A

Mechanical and Housing

Bulb Shape	C-T29

Approval and Application

Mercury (Hg) Content (Nom)	8 mg

© 2026 Signify Holding. All rights reserved. The information provided herein is subject to change, without notice. Signify does not give any representation or warranty as to the accuracy or completeness of the information included herein and shall not be liable for any action in reliance thereon. The information presented in this document is not intended as any commercial offer and does not form part of any quotation or contract, unless otherwise agreed by Signify. Philips and the Philips Shield Emblem are registered trademarks of Koninklijke Philips N.V.