PHILIPS

MasterColor CDM-R Elite

D_CDMRE



Simply irresistable. Superior light quality from start to finish

The Elite family is at the very top of the MasterColor CDM range, and gives a unique combination of unbeatable light quality and consistent performance over lifetime, while keeping running costs low. MasterColor metal halide lamps deliver consistent white light and higher color rendering than any standard metal halide source for architectural lighting.MasterColor CDM Elite PAR30L lamps deliver similar performance as the MasterColor Elite family lamps in the familiar PAR30L shape.

Benefits

- Energy-efficient alternative to incandescent, halogen and standard MasterColor PAR30L lamps.
- Improved lumen maintenance over standard metal halide and standard MasterColor PAR30L lamps.
- Lamp to lamp color consistency over life.

Applications

- Ideal for display and accent lighting in retail and architectural lighting for interior and exterior applications.

Features

- Exceptional color rendering and superior color stability -- within +/- 200 K, CRI 90, 3000 K

- Low mercury, no lead; ALTO-compliant
- Operates on existing electronic and electromagnetic ballasts
- Features FadeBlock™—an integrated UV-blocking medium for reduced fading of fabrics and paintings
- Available in 35 and 70 W versions
- R "WARNING: These lamps can cause serious skin burn and eye inflammation from short wave ultraviolet radiation if outer envelope of the lamp is broken or punctured. Do not use where people will remain for more than a few minutes unless adequate shielding or other safety precautions are used. Certain lamps that will automatically extinguish when the outer envelope is broken or punctured are commercially available." This lamp complies with FDA radiation performance standard 21 CFR subchapter J. (USA:21 CFR 1040.30 Canada: SOR/DORS/80-381)

Versions



LPPR CDM-R-E 0005

Dimensional drawing

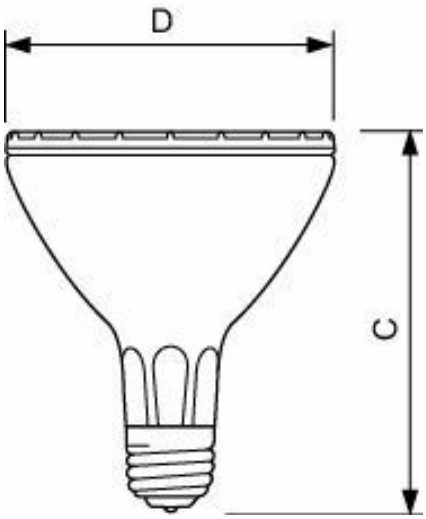

Product	D (max)	C (max)
MC CDM-R Elite 35W/930 E26 PAR30L 30D	97 mm	123 mm
MC CDM-R Elite 70W/930 E26 PAR30L 40D	97 mm	123 mm

General Information

Cap-Base	E26 [Single Contact Medium Screw]
Operating Position	UNIVERSAL [Any or Universal (U)]
Switching Cycle	1,350

Light Technical

Color Designation	Warm White (WW)
Correlated Color Temperature (Nom)	3000 K
LLMF At End Of Nominal Lifetime (Nom)	80 %

Operating and Electrical

Warm-up time to 60% light	120 s

Controls and Dimming

Dimmable	No

Mechanical and Housing

Bulb Finish	Clear
Bulb Shape	PAR30L

Light Technical

Order Code	Full Product Name	Beam Angle (Nom)	Luminous Intensity (Nom)	Chromaticity Coordinate X (Nom)	Chromaticity Coordinate Y (Nom)	Luminous Efficacy (rated) (Nom)	Color rendering index (CRI)
928108400615	MC CDM-R Elite 35W/930 E26 PAR30L 30D	30 degree(s)	8,000 cd	0.437	0.400	69 lm/W	91
928109800615	MC CDM-R Elite 70W/930 E26 PAR30L 40D	40 degree(s)	9,300 cd	0.443	0.402	70 lm/W	92

Operating and Electrical

Order Code	Full Product Name	Power Consumption	Voltage (Nom)
928108400615	MC CDM-R Elite 35W/930 E26 PAR30L 30D	39 W	88 V
928109800615	MC CDM-R Elite 70W/930 E26 PAR30L 40D	73.0 W	86 V

Approval and Application

Order Code	Full Product Name	Mercury (Hg) Content (Nom)	Energy Consumption kWh/1000 h
928108400615	MC CDM-R Elite 35W/930 E26 PAR30L 30D	4.7 mg	43 kWh
928109800615	MC CDM-R Elite 70W/930 E26 PAR30L 40D	6.6 mg	80 kWh

© 2026 Signify Holding. All rights reserved. The information provided herein is subject to change, without notice. Signify does not give any representation or warranty as to the accuracy or completeness of the information included herein and shall not be liable for any action in reliance thereon. The information presented in this document is not intended as any commercial offer and does not form part of any quotation or contract, unless otherwise agreed by Signify. Philips and the Philips Shield Emblem are registered trademarks of Koninklijke Philips N.V.