PHILIPS

TCBRMR 19S/930 IA5 OC WH401

912500108787



Essential recessed, 3D printed, 15.4 W, D400mm, 1817 lm, 3000 K, CRI>90, Wireless, Interact Ready, UGR19, IA5, TP(b)

D400mm, Polycarbonate, White, Sensor ready driver Interact System ready, Interact SC1500 Multi-sensor bundle, 1817 lm, 15.4 W, 118 lm/W, 3000 K, (0.44, 0.40) SDCM < 3, CRI>90, UGR19, Beam angle 90°, Micro-hexagonal optic, Polystyrene, IP20 | Finger-protected, IK04 | 0.5 J standard plus, Safety class II, 2 Push-in connector 2-pole, Feed-through wiring 1-phase, TP(b) diffuser flammability class

General Information

Number of gear units	1 unit
Driver included	Yes
Sustainability rating	Unclassified
Service tag	Yes
Value ladder	Specification
Warranty period	5 years

Light Technical

Luminous Flux	1,817 lm
Correlated Color Temperature (Nom)	3000 K
Luminous Efficacy (rated) (Nom)	118 lm/W
Color rendering index (CRI)	>90
Beam angle of light source	90 degree(s)
Light source color	930 warm white
Optic type	Beam angle 90°
Luminaire light beam spread	90°
Unified glare rating CEN	19
Indirect glare reduction measure for Display Screen Equipment (EN 12464-2021)	L65≤3000 cd/m²

Operating and Electrical

Input Voltage	220/240 V
Line Frequency	50 to 60 Hz
Inrush current	6.7 A
Inrush time	0.03 ms
Power Consumption	15.4 W
Power Factor (Fraction)	0.9
Connection	2 Push-in connector 2-pole
Cable	-
Number of products on MCB of 16 A type B	100
Suitable for random switching	Yes (relates to presence/ movement detection and daylight harvesting)
Protection class IEC	Safety class II
Feed-through wiring	Feed-through wiring 1-phase
Total harmonic distortion	2 %

Controls and Dimming

Dimmable	Yes
Driver/power unit/transformer	Sensor ready driver Interact System ready
Control interface	Wireless
Constant light output	No
Connectivity	Interact Ready
Embedded control	Interact SC1500 Multi-sensor bundle

Mechanical and Housing

Housing Material	Polycarbonate
Reflector material	-
Optic material	Polycarbonate
Optical cover material	Polystyrene
Fixation material	-
Housing Color	White
Optical cover finish	Micro-hexagonal optic
Overall height	82 mm
Overall diameter	400 mm
Ingress protection code	IP20 [Finger-protected]
Mech. impact protection code	IK04 [0.5 J standard plus]
Mounting	Recessed
Net Weight (Piece)	2.200 kg

Emergency Operation

Central Emergency	No

Approval and Application

Glow-wire test	Temperature 650 °C, duration 30 s
Flammability mark	-
CE mark	Yes
ENEC mark	ENEC mark
EU RoHS compliant	Yes
Diffuser Flammability Class	TP(b) diffuser flammability class
Performance ambient temperature Tq	25 °C
Ambient temperature range	+10 to +35 °C

Initial Performance (IEC Compliant)

Luminous flux tolerance	-10% / +10%
Initial chromaticity	(0.44, 0.40) SDCM < 3
Power consumption tolerance	+/-10%

Over Time Performance (IEC Compliant)

Control gear failure rate at median useful life 50000 h	10 %
Lumen maintenance (EN-IEC 62722-2-1) at median useful life* 50000 h	L80
Lumen maintenance (EN-IEC 62722-2-1) at median useful life* 100000 h	L80

Sustainability Data

Repair class	Repair Class C, the driver of this luminaire can be replaced by a service technician. Special care is required during disassembly and reassembly, and specific tools may be required. Parts and documentation are available for a period of time.
Non-virgin material ratio of the packaging	Cardboard > 80% recycled
Packaging Recyclable content ratio	Cardboard recycling rate > 80%
Packaging Material	Cardboard

Product Data

Order product name	TCBRMR 19S/930 IA5 OC WH401
Full product name	TCBRMR 19S/930 IA5 OC WH401
Full product code	872016986436800
Order code	912500108787
Material Nr. (12NC)	912500108787
Numerator - Quantity Per Pack	1
EAN/UPC - Product/Case	8720169864368
Numerator - Packs per outer box	1
EAN/UPC - Case	8720169864368
Product family code	TCBRRM [Essential Recessed Mount]

Dimensional drawing

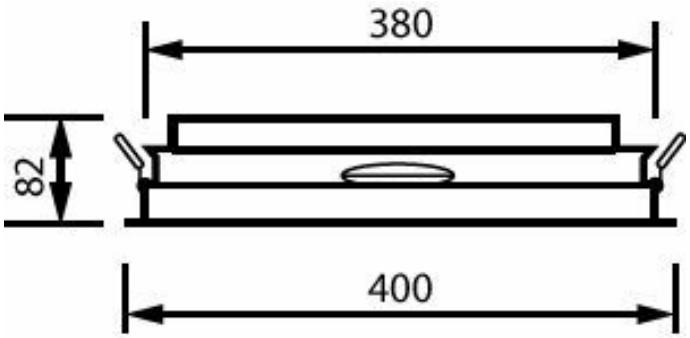

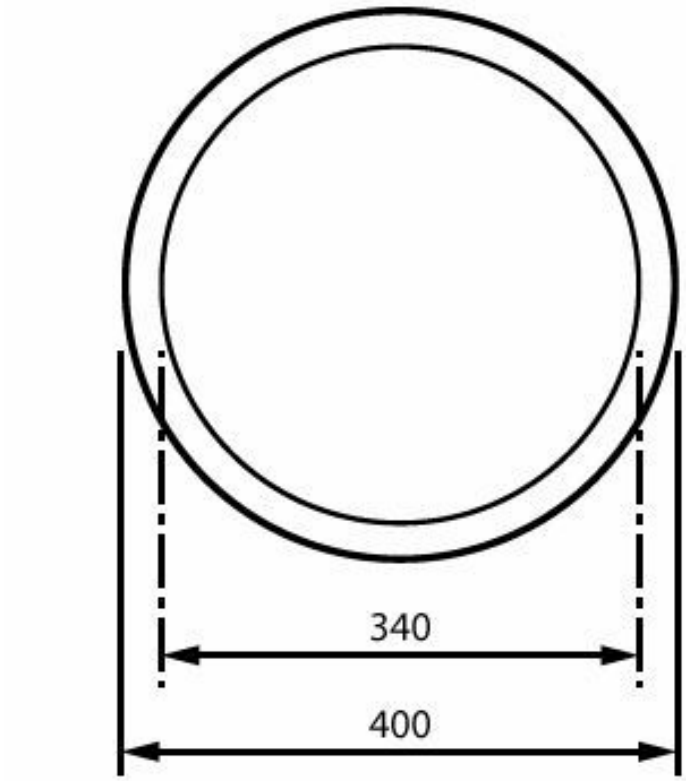

Integrated Sensor

Sensor Image English	Sensor Code	Sensor Name	Website
	913713619703	SC1500/05 MSB LowB - TMPix - ZB/BLE	Product Website

Related Documents

Documents and certificates	Document Name	Download
Tender text	Tender_Text_912500108787_en_AA.txt	Download
Installation Instructions	4422-948-622190-essential-recessed-mount-medium-br-series-INI.pdf	Download

Photometry and lighting design	Document Name	Download
IES File	EssentialRecessed-TCBR-MR19S930IA5OC.ies	Download

© 2026 Signify Holding. All rights reserved. The information provided herein is subject to change, without notice. Signify does not give any representation or warranty as to the accuracy or completeness of the information included herein and shall not be liable for any action in reliance thereon. The information presented in this document is not intended as any commercial offer and does not form part of any quotation or contract, unless otherwise agreed by Signify. Philips and the Philips Shield Emblem are registered trademarks of Koninklijke Philips N.V.