PHILIPS

GreenPerform Waterproof +5

WT178C



GreenPerform Waterproof +5: 5 extra features, better value

Like all the luminaires in the GreenPerform series, GreenPerform Waterproof +5 offers excellent energy savings, a long lifetime, good optical performance, and robust design. GreenPerform Waterproof +5 features superior floor illumination, high efficacy of 150-154 lm/W, an IP66 rating, quick on-site assembly, and user-friendly maintenance. Choose GreenPerform Waterproof +5 battens for a wide range of industrial and office applications.

Benefits

- Excellent energy savings
- Superior floor illumination
- Waterproof (IP66)
- Quick on-site assembly
- User-friendly maintenance

Applications

- Parking Garages
- Warehouses
- Manufacturing

Features

- Up to 154 lm/W
- Lifetime of 50,000 hrs (L70B50@25°C)

- Wide beam optics, uniform and superior floor illumination
- IP66/IK08, strong and robust

Versions

GreenPerform Waterproof +5



GreenPerform Waterproof +5



GreenPerform Waterproof +5



Dimensional drawing

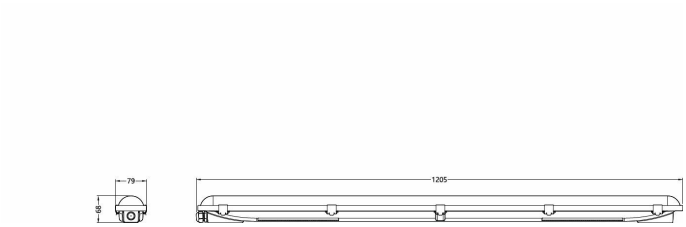

WT178C LED43S/865 PSU L1200

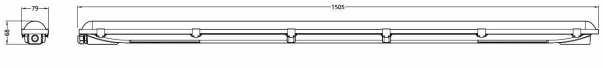

WT178C LED87S/840 PSU L1500

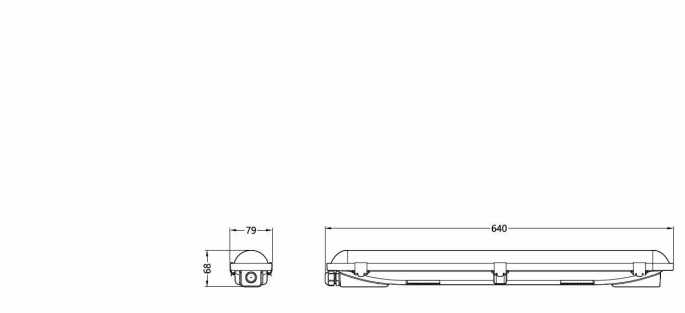

WT178C LED27S/865 PSU L600

General Information

Driver included	Yes

Light Technical

Color rendering index (CRI)	80

Operating and Electrical

Input Voltage	100 to 277 V
Line Frequency	50 to 60 Hz
Protection class IEC	Safety class I

Controls and Dimming

Dimmable	Fixed

Mechanical and Housing

Housing Color	Gray and White
Ingress protection code	IP66 [Dust penetration-protected, jet-proof]
Mech. impact protection code	IK08 [6 J]
Optical cover type	Polycarbonate bowl/cover

Approval and Application

CE mark	No
Ambient temperature range	-30 to +50 °C

Initial Performance (IEC Compliant)

Luminous flux tolerance	-10% / +10%

Light Technical

Order Code	Full Product Name	Luminous Flux	Correlated Color Temperature (Nom)	Luminous Efficacy (rated) (Nom)
911401553446	WT178C LED22S/830 PSU L600	2,100 lm	3000 K	140 lm/W
911401553546	WT178C LED22S/840 PSU L600	2,250 lm	4000 K	150 lm/W
911401553646	WT178C LED22S/865 PSU L600	2,250 lm	6500 K	150 lm/W
911401553746	WT178C LED27S/830 PSU L600	2,520 lm	3000 K	144 lm/W
911401553846	WT178C LED27S/840 PSU L600	2,700 lm	4000 K	154.3 lm/W
911401553946	WT178C LED27S/865 PSU L600	2,700 lm	6500 K	154.3 lm/W
911401554046	WT178C LED43S/830 PSU L1200	4,075 lm	3000 K	143 lm/W
911401554146	WT178C LED43S/840 PSU L1200	4,350 lm	4000 K	152.6 lm/W
911401554246	WT178C LED43S/865 PSU L1200	4,350 lm	6500 K	152.6 lm/W
911401554346	WT178C LED54S/830 PSU L1200	5,040 lm	3000 K	144 lm/W
911401554446	WT178C LED54S/840 PSU L1200	5,400 lm	4000 K	154.3 lm/W
911401554546	WT178C LED54S/850 PSU L1200	5,400 lm	5000 K	154.3 lm/W
911401554646	WT178C LED54S/865 PSU L1200	5,400 lm	6500 K	154.3 lm/W

Order Code	Full Product Name	Luminous Flux	Correlated Color Temperature (Nom)	Luminous Efficacy (rated) (Nom)
911401559646	WT178C LED43S/850 PSU L1200	4,350 lm	6500 K	152.6 lm/W
911401554746	WT178C LED64S/830 PSU L1500	6,048 lm	3000 K	144 lm/W
911401554846	WT178C LED64S/840 PSU L1500	6,450 lm	4000 K	153.6 lm/W
911401554946	WT178C LED64S/850 PSU L1500	6,450 lm	5000 K	153.6 lm/W
911401555046	WT178C LED64S/865 PSU L1500	6,450 lm	6500 K	153.6 lm/W
911401555146	WT178C LED87S/830 PSU L1500	8,136 lm	3000 K	144 lm/W
911401555246	WT178C LED87S/840 PSU L1500	8,700 lm	4000 K	154 lm/W
911401555346	WT178C LED87S/850 PSU L1500	8,700 lm	5000 K	154 lm/W
911401555446	WT178C LED87S/865 PSU L1500	8,700 lm	6500 K	154 lm/W

Operating and Electrical

Order Code	Full Product Name	Power Consumption
911401553446	WT178C LED22S/830 PSU L600	15 W
911401553546	WT178C LED22S/840 PSU L600	15 W
911401553646	WT178C LED22S/865 PSU L600	15 W
911401553746	WT178C LED27S/830 PSU L600	17.5 W
911401553846	WT178C LED27S/840 PSU L600	17.5 W
911401553946	WT178C LED27S/865 PSU L600	17.5 W
911401554046	WT178C LED43S/830 PSU L1200	28.5 W
911401554146	WT178C LED43S/840 PSU L1200	28.5 W
911401554246	WT178C LED43S/865 PSU L1200	28.5 W
911401554346	WT178C LED54S/830 PSU L1200	35 W
911401554446	WT178C LED54S/840 PSU L1200	35 W
911401554546	WT178C LED54S/850 PSU L1200	35 W
911401554646	WT178C LED54S/865 PSU L1200	35 W
911401559646	WT178C LED43S/850 PSU L1200	28.5 W
911401554746	WT178C LED64S/830 PSU L1500	42 W
911401554846	WT178C LED64S/840 PSU L1500	42 W
911401554946	WT178C LED64S/850 PSU L1500	42 W
911401555046	WT178C LED64S/865 PSU L1500	42 W
911401555146	WT178C LED87S/830 PSU L1500	56.5 W
911401555246	WT178C LED87S/840 PSU L1500	56.5 W
911401555346	WT178C LED87S/850 PSU L1500	56.5 W
911401555446	WT178C LED87S/865 PSU L1500	56.5 W

© 2026 Signify Holding. All rights reserved. The information provided herein is subject to change, without notice. Signify does not give any representation or warranty as to the accuracy or completeness of the information included herein and shall not be liable for any action in reliance thereon. The information presented in this document is not intended as any commercial offer and does not form part of any quotation or contract, unless otherwise agreed by Signify. Philips and the Philips Shield Emblem are registered trademarks of Koninklijke Philips N.V.