PHILIPS

BY240P LED150_220_280S/ 840_50_65 WB SA

911401856787



SmartBright Lumen & Colour Select Highbay, 195 W, 100 W, 28000 lm, 15000 lm, 4000 K, 5000 K, 6500 K

The SmartBright Lumen and Colour Selectable Highbay delivers unparalleled flexibility for a wide range of applications. Colour selectable (4000K/4500K/5000K) and lumen selectable from 15K to 28K lumens in the one handy package makes this the only highbay you need for almost any application. An optional motion sensor adds strong energy saving credentials.

General Information

Driver included	Yes
Light source engine type	LED
Value ladder	Value

Light Technical

Luminous Flux	28,000 lm
Correlated Color Temperature (Nom)	4000 K
Luminous Efficacy (rated) (Nom)	155 lm/W
Color rendering index (CRI)	≥80
Light source color	Multi Color Temperature
Unified glare rating CEN	31
Effective projected area	0.08 m^2

Operating and Electrical

Input Voltage	220 to 240 V
Line Frequency	50 or 60 Hz
Inrush current	68 A
Inrush time	0.213 ms
Power Consumption	195 W
Power Factor (Fraction)	0.9
Number of products on MCB of 16 A type B	9
Protection class IEC	Safety class I

Controls and Dimming

Dimmable	Step Dim
Control interface	-

Mechanical and Housing

Housing Material	Aluminum die-cast
Optical cover material	Polycarbonate
Housing Color	Black
Optical cover finish	Clear
Overall height	119 mm
Overall diameter	320 mm
Ingress protection code	IP65 [Dust penetration-protected, jet-proof]
Mech. impact protection code	IK07 [2 J reinforced]
Optical cover type	Polycarbonate
Net Weight (Piece)	2.450 kg

Approval and Application

Flammability mark	For mounting on normally flammable surfaces
CE mark	No
Ambient temperature range	-30 to +50 °C

Dimensional drawing

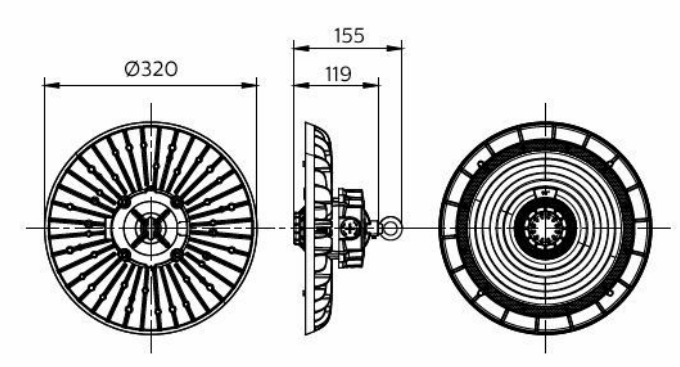

Initial Performance (IEC Compliant)

Luminous flux tolerance	+/-10%
Initial chromaticity	(0.38, 0.38); (0.31, 0.34) SDCM≤5
Power consumption tolerance	+/-10%

Product Data

Order product name	BY240P LED150_220_280S/ 840_50_65 WB SA
Full product name	BY240P LED150_220_280S/ 840_50_65 WB SA
Full product code	871016333396000
Order code	911401856787
Material Nr. (12NC)	911401856787
Numerator - Quantity Per Pack	1
EAN/UPC - Product/Case	8710163333960
Numerator - Packs per outer box	1
EAN/UPC - Case	8710163333960

Related Documents

Documents and certificates	Document Name	Download
Installation Instructions	BY240P-G2-Highbay-INI.pdf	Download

Photometry and lighting design	Document Name	Download
IES File	BY240P-G2-Photometry-IES.zip	Download

© 2026 Signify Holding. All rights reserved. The information provided herein is subject to change, without notice. Signify does not give any representation or warranty as to the accuracy or completeness of the information included herein and shall not be liable for any action in reliance thereon. The information presented in this document is not intended as any commercial offer and does not form part of any quotation or contract, unless otherwise agreed by Signify. Philips and the Philips Shield Emblem are registered trademarks of Koninklijke Philips N.V.