PHILIPS

Lighting

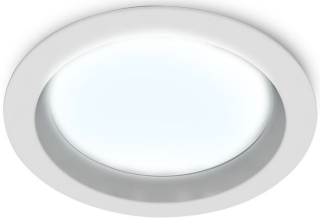

Dimmable high Performance LED downlight for indoors

GreenPerform DN391/392/393/394/395 downlight

GreenPerform is a high performance Led downlight family suitable for use in a series of Lighting applications in Office, Retail and General Area Lighting. Available in a wide variety of lumen packs, color temp and options of all type of dimming(Phase Cut/Analogue/DALI), GreenPerform becomes the perfect solution for downlight applications for professional users.

Benefits

- Multiple options in Dimming
- Wide range of lumen pack and CCT
- Long life of 50K hours
- High colour consistency

Features

- Aluminium heat sink for better heat dissipation
- Higher life class of 50K burning hour
- Available in both Dimming & fixed output
- Low Energy consumption- High Efficacy more than 100lm/ Watt
- Suitable for low ceiling heights
- Wide range of lumen packs (600lm-2000lm)

GreenPerform DN391/392/393/394/395 downlight

Application

- Office Lighting
- Shop/Showroom Lighting
- Corridor Lighting
- Meeting & conference room lighting
- Reception & general area Lighting

Warnings and Safety

- Meant for use in Indoor environment only

Dimensional drawing

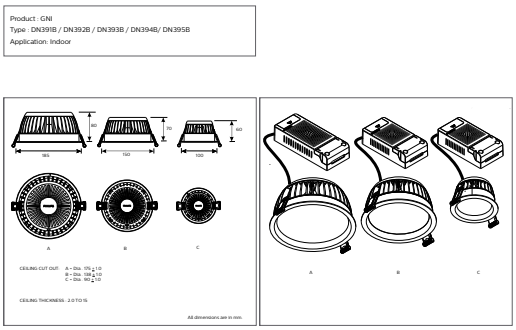

General Information	
Driver included	Yes
Light Technical	
Beam angle of light source	120 degree(s)
Color rendering index (CRI)	>80
Luminous Efficacy (rated) (Nom)	100 lm/W
Optic type	-
Operating and Electrical	
Protection class IEC	Safety class I
Input Voltage	220-240 V
Mechanical and Housing	
Optical cover type	Polycarbonate
Housing Color	White
Mech. impact protection code	IK02
Ingress protection code	IP20
Approval and Application	
Ambient temperature range	0 to +45 °C
Flammability mark	For mounting on normally flammable surfaces

Light Technical

Order Code	Full Product Name	Correlated Color Temperature (Nom)	Luminous Flux
919515810463	DN 392B LED 10S-6500 PSD WH	6500 K	1,000 lm
919515810464	DN 393B LED 12S-6500 PSD WH	6500 K	1,200 lm
919515810465	DN 394B LED 16S-6500 PSD WH	6500 K	1,600 lm
919515810466	DN 395B LED 20S-6500 PSD WH	6500 K	2,000 lm
919515810467	DN 392B LED 10S-4000 PSD WH	6500 K	1,000 lm
919515810468	DN 393B LED 12S-4000 PSD WH	4000 K	1,200 lm
919515810469	DN 394B LED 16S-4000 PSD WH	4000 K	1,600 lm
919515810470	DN 395B LED 20S-4000 PSD WH	4000 K	2,000 lm
919515810471	DN 392B LED 10S-3000 PSD WH	3000 K	1,000 lm
919515810472	DN 393B LED 12S-3000 PSD WH	3000 K	1,200 lm
919515810473	DN 394B LED 16S-3000 PSD WH	3000 K	1,600 lm
919515810474	DN 395B LED 20S-3000 PSD WH	3000 K	2,000 lm
919515810478	DN 391B LED6S-6500 PSU WH	6500 K	600 lm
919515810479	DN 392B LED10S-6500 PSU WH	6500 K	1,000 lm
919515810480	DN 393B LED12S-6500 PSU WH	6500 K	1,200 lm
919515810482	DN 395B LED20S-6500 PSU WH	6500 K	2,000 lm
919515810483	DN 391B LED6S-4000 PSU WH	4000 K	600 lm
919515810484	DN 392B LED10S-4000 PSU WH	4000 K	1,000 lm
919515810485	DN 393B LED12S-4000 PSU WH	4000 K	1,200 lm
919515810486	DN 394B LED16S-4000 PSU WH	4000 K	1,600 lm
919515810487	DN 395B LED20S-4000 PSU WH	4000 K	2,000 lm
919515810488	DN 391B LED6S-3000 PSU WH	3000 K	600 lm
919515810489	DN 392B LED10S-3000 PSU WH	3000 K	1,000 lm
919515810490	DN 393B LED12S-3000 PSU WH	3000 K	1,200 lm
919515810491	DN 394B LED16S-3000 PSU WH	3000 K	1,600 lm

GreenPerform DN391/392/393/394/395 downlight

Order Code	Full Product Name	Correlated Color Temperature (Nom)	Luminous Flux
919515810492	DN 395B LED20S-3000 PSU WH	3000 K	2,000 lm

Operating and Electrical

Order Code	Full Product Name	Power Consumption
919515810463	DN 392B LED 10S-6500 PSD WH	10.6 W
919515810464	DN 393B LED 12S-6500 PSD WH	12 W
919515810465	DN 394B LED 16S-6500 PSD WH	15.5 W
919515810466	DN 395B LED 20S-6500 PSD WH	22 W
919515810467	DN 392B LED 10S-4000 PSD WH	10.6 W
919515810468	DN 393B LED 12S-4000 PSD WH	12 W
919515810469	DN 394B LED 16S-4000 PSD WH	15.5 W
919515810470	DN 395B LED 20S-4000 PSD WH	22 W
919515810471	DN 392B LED 10S-3000 PSD WH	10.6 W
919515810472	DN 393B LED 12S-3000 PSD WH	12 W
919515810473	DN 394B LED 16S-3000 PSD WH	15.5 W
919515810474	DN 395B LED 20S-3000 PSD WH	22 W
919515810478	DN 391B LED6S-6500 PSU WH	6.5 W

Order Code	Full Product Name	Power Consumption
919515810479	DN 392B LED10S-6500 PSU WH	10.6 W
919515810480	DN 393B LED12S-6500 PSU WH	12 W
919515810482	DN 395B LED20S-6500 PSU WH	22 W
919515810483	DN 391B LED6S-4000 PSU WH	6.5 W
919515810484	DN 392B LED10S-4000 PSU WH	10.6 W
919515810485	DN 393B LED12S-4000 PSU WH	12 W
919515810486	DN 394B LED16S-4000 PSU WH	15.5 W
919515810487	DN 395B LED20S-4000 PSU WH	22 W
919515810488	DN 391B LED6S-3000 PSU WH	6.5 W
919515810489	DN 392B LED10S-3000 PSU WH	10.6 W
919515810490	DN 393B LED12S-3000 PSU WH	12 W
919515810491	DN 394B LED16S-3000 PSU WH	15.5 W
919515810492	DN 395B LED20S-3000 PSU WH	22 W

Controls and Dimming

Order Code	Full Product Name	Dimmable
919515810463	DN 392B LED 10S-6500 PSD WH	Yes
919515810464	DN 393B LED 12S-6500 PSD WH	Yes
919515810465	DN 394B LED 16S-6500 PSD WH	Yes
919515810466	DN 395B LED 20S-6500 PSD WH	Yes
919515810467	DN 392B LED 10S-4000 PSD WH	Yes
919515810468	DN 393B LED 12S-4000 PSD WH	Yes
919515810469	DN 394B LED 16S-4000 PSD WH	Yes
919515810470	DN 395B LED 20S-4000 PSD WH	Yes
919515810471	DN 392B LED 10S-3000 PSD WH	Yes
919515810472	DN 393B LED 12S-3000 PSD WH	Yes
919515810473	DN 394B LED 16S-3000 PSD WH	Yes
919515810474	DN 395B LED 20S-3000 PSD WH	Yes
919515810478	DN 391B LED6S-6500 PSU WH	No

Order Code	Full Product Name	Dimmable
919515810479	DN 392B LED10S-6500 PSU WH	No
919515810480	DN 393B LED12S-6500 PSU WH	No
919515810482	DN 395B LED20S-6500 PSU WH	No
919515810483	DN 391B LED6S-4000 PSU WH	No
919515810484	DN 392B LED10S-4000 PSU WH	No
919515810485	DN 393B LED12S-4000 PSU WH	No
919515810486	DN 394B LED16S-4000 PSU WH	No
919515810487	DN 395B LED20S-4000 PSU WH	No
919515810488	DN 391B LED6S-3000 PSU WH	No
919515810489	DN 392B LED10S-3000 PSU WH	No
919515810490	DN 393B LED12S-3000 PSU WH	No
919515810491	DN 394B LED16S-3000 PSU WH	No
919515810492	DN 395B LED20S-3000 PSU WH	No

© 2025 Signify Holding All rights reserved. Signify does not give any representation or warranty as to the accuracy or completeness of the information included herein and shall not be liable for any action in reliance thereon. The information presented in this document is not intended as any commercial offer and does not form part of any quotation or contract, unless otherwise agreed by Signify. All trademarks are owned by Signify Holding or their respective owners.