PHILIPS

RC091V LED30S/865 PSU W60L60 CPC G4

911401864585



Philips SmartBright Slim Panel RC091, 100 lm/W, 865 cool daylight

The Philips SmartBright range is comprised of a selection of essential LED luminaires that come with Philips high levels of quality at a competitive price. Reliable, energy efficient and affordable lighting solutions that you can count on to deliver what they promise. Philips SmartBright Slim Panels are our most affordable LED solution. The complete product family is available in multiple mounting types, product dimensions and lumen options to suit the widest range of applications. And thanks to the edge-lit structure, SmartBright panels deliver both higher system efficacy and excellent lighting uniformity. The essential range of LED slim panels for everyday installations.

General Information

Gear	-
Driver included	Yes
Light source engine type	LED
Value ladder	Value

Light Technical

Luminous Flux	3,000 lm
Correlated Color Temperature (Nom)	6500 K
Luminous Efficacy (rated) (Nom)	100 lm/W
Color rendering index (CRI)	>80
Beam angle of light source	120 degree(s)
Light source color	865 cool daylight
Unified glare rating CEN	22
Effective projected area	0.36 m^2

Operating and Electrical

Input Voltage	222 to 240 V
Line Frequency	50 or 60 Hz
Power Consumption	30 W
Power Factor (Fraction)	0.9
Connection	-
Cable	-
Number of products on MCB of 16 A type B	-
Protection class IEC	Safety class II

Controls and Dimming

Dimmable	-
Control interface	-

Mechanical and Housing

Housing Material	Aluminum
Optical cover material	Polystyrene
Housing Color	Aluminum
Optical cover finish	Matte
Ingress protection code	IP20/40 [Finger-protected, Emitting surface]
Mech. impact protection code	IK02 [0.2 J standard]
Optical cover type	Polymethyl methacrylate bowl/ cover
Net Weight (Piece)	2.100 kg

Dimensional drawing

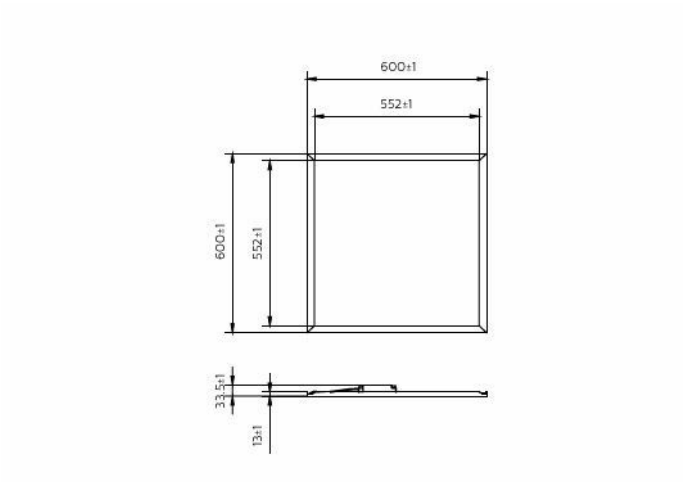

Approval and Application

Glow-wire test	Temperature 650 °C, duration 30 s
Flammability mark	For mounting on normally flammable surfaces
CE mark	No
ENEC mark	-
EU RoHS compliant	Yes
Ambient temperature range	-10 to +35 °C

Initial Performance (IEC Compliant)

Luminous flux tolerance	-10%,+15%
Initial chromaticity	(0.3123,0.3282)SDCM<5
Power consumption tolerance	+/-15%

Product Data

Order product name	RC091V LED30S/865 PSU W60L60 CPC G4
Full product name	RC091V LED30S/865 PSU W60L60 CPC G4
Full product code	692382867065899
Order code	911401864585
Material Nr. (12NC)	911401864585
Numerator - Quantity Per Pack	1
EAN/UPC - Product/Case	6923828670658
Numerator - Packs per outer box	6
EAN/UPC - Case	6923828670658

Related Documents

Documents and certificates	Document Name	Download
Installation Instructions	RC091-MI-GC-INI.pdf	Download

Photometry and lighting design	Document Name	Download
IES File	RC091-LED30S-6060-IES.ies	Download

© 2026 Signify Holding. All rights reserved. The information provided herein is subject to change, without notice. Signify does not give any representation or warranty as to the accuracy or completeness of the information included herein and shall not be liable for any action in reliance thereon. The information presented in this document is not intended as any commercial offer and does not form part of any quotation or contract, unless otherwise agreed by Signify. Philips and the Philips Shield Emblem are registered trademarks of Koninklijke Philips N.V.