PHILIPS

HID-HeavyDuty BSN semi-parallel for SON/CDO/MH/HPI

DHDSNSP



Long-lasting, reliable solution

Encapsulated electromagnetic copper/iron ballasts for use with an external semi-parallel ignitor for CDM, CDO, MH, HPI (Plus) and SON lamps

Benefits

- Excellent resistance to chemical impact, humid conditions and environmental stress crack
- Long-lasting reliable solution – outstanding product lifetime of 15 years average
- Minimal watt losses thanks to orthocyclic winding process
- Control gear can be installed remotely

Applications

- Outdoor lighting (most popular application: road and tunnel lighting)

Features

- Encapsulated with thermoplastic polyester resin, reinforced with glass fiber
- Equipped with screw terminal blocks as standard; insert contacts available upon request
- Ballasts for alternative mains voltages/frequencies available upon request
- Separate earth terminal (HID ‘Heavy Duty’)

Versions

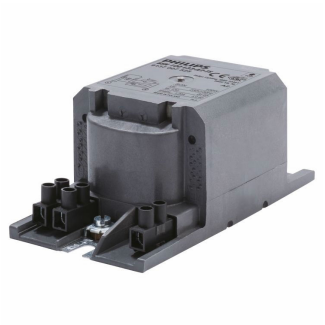

BSN 100 L33-A2-TS 230V



BSN 150 L33-A2-TS 230V



BSN 250 L33-A2-TS 230V

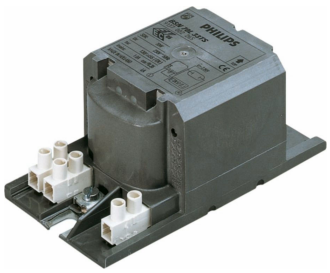

GPPR BSN-HD PHL

Dimensional drawing

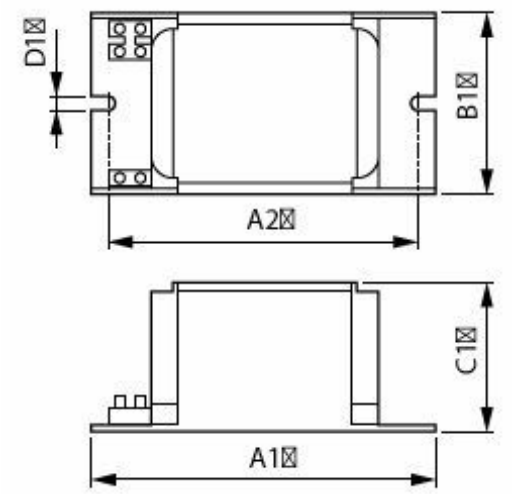

Product	D1	C1	A1	A2	B1
BSN 400 L33-A2-TS 230V 50Hz HD3-166	6.2 mm	84.0 mm	166.0 mm	147.5 mm	102.0 mm
BSN 70 L33-A2-TS 230V 50Hz HD1-118	6.2 mm	53.0 mm	118.0 mm	103.0 mm	65.0 mm

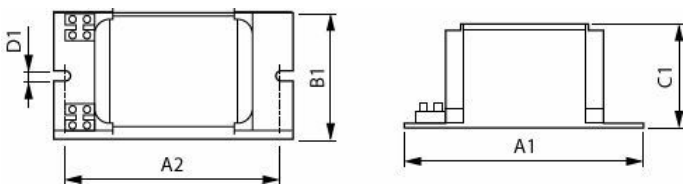

Product	A1	A2	B1	C1	D1
BSN 100 L33-A2-TS 230V 50Hz	123 mm	108 mm	65 mm	53 mm	6.2 mm
BSN 150 L33-A2-TS 230V 50Hz	126 mm	108 mm	81 mm	66 mm	6.2 mm
BSN 250 L33-A2-TS 230V 50Hz	151 mm	132 mm	81 mm	66 mm	6.2 mm

Operating and Electrical

Input Voltage	230 V
Line Frequency	50 Hz
Input Frequency	50 Hz

© 2026 Signify Holding. All rights reserved. The information provided herein is subject to change, without notice. Signify does not give any representation or warranty as to the accuracy or completeness of the information included herein and shall not be liable for any action in reliance thereon. The information presented in this document is not intended as any commercial offer and does not form part of any quotation or contract, unless otherwise agreed by Signify. Philips and the Philips Shield Emblem are registered trademarks of Koninklijke Philips N.V.