PHILIPS

BN017C LED60/840 X 2ft

911401806187



Essential Smartbright LED Batten, 60 W, 6000 lm, 4000 K, Wide beam

Whether for a new building or renovation of an existing space, customers want lighting solutions that provide quality of light and substantial energy and maintenance savings. This new batten range of LED products can be used to replace traditional battens with fluorescent lamps. The process of selecting, installing and maintaining is so easy – it's a simple switch

General Information

Number of gear units	1 unit
Gear	-
Driver included	Yes
Light source engine type	LED
Value ladder	Value
Warranty period	1 years

Light Technical

Luminous Flux	6,000 lm
Correlated Color Temperature (Nom)	4000 K
Luminous Efficacy (rated) (Nom)	100 lm/W
Color rendering index (CRI)	80
Number of light sources	1
Beam angle of light source	110 degree(s)
Light source color	840 neutral white
Optic type	Wide beam
Luminaire light beam spread	110°
Unified glare rating CEN	30

Operating and Electrical

Input Voltage	220 V
Line Frequency	60 Hz
Inrush current	40 A
Inrush time	0.28 ms
Power Consumption	60 W
Power Factor (Fraction)	0.5
Connection	Flying leads/wires
Cable	Cable 0.3 m without plug
Number of products on MCB of 16 A type B	12
Suitable for random switching	Not applicable
Protection class IEC	Safety class II

Controls and Dimming

Dimmable	-
Control interface	-
Maximum dim level	Not applicable

Initial Performance (IEC Compliant)

Luminous flux tolerance	+/-10%
Initial chromaticity	(0.38, 0.38) SDCM<7
Power consumption tolerance	+/-10%

Mechanical and Housing

Housing Material	Polypropylene
Reflector material	-
Optic material	Polypropylene
Optical cover material	Polypropylene
Housing Color	White
Mounting device	Mounting bracket
Optical cover finish	Opal
Overall length	560 mm
Overall width	560 mm
Overall height	50 mm
Dimensions (Height x Width x Depth)	50 x 560 x 560 mm
Ingress protection code	IP20 [No protection]
Mech. impact protection code	IK03 [0.3 J]
Optical cover type	Opal
Net Weight (Piece)	0.430 kg

Product Data

Order product name	BN017C LED60/840 X 2ft
Full product name	BN017C LED60/840 X 2ft
Full product code	872016975109599
Order code	911401806187
Material Nr. (12NC)	911401806187
Numerator - Quantity Per Pack	1
EAN/UPC - Product/Case	8720169751095
Numerator - Packs per outer box	10
EAN/UPC - Case	8720169751156

Approval and Application

Glow-wire test	Temperature 650 °C, duration 30 s
Flammability mark	For mounting on normally flammable surfaces
CE mark	No
ENEC mark	-
Photobiological risk	Photobiological risk group 1 @200mm to EN62778
Photobiological risk specification	0.2 m
EU RoHS compliant	Yes
Performance ambient temperature Tq	25 °C
Ambient temperature range	-20 to +40 °C

Dimensional drawing

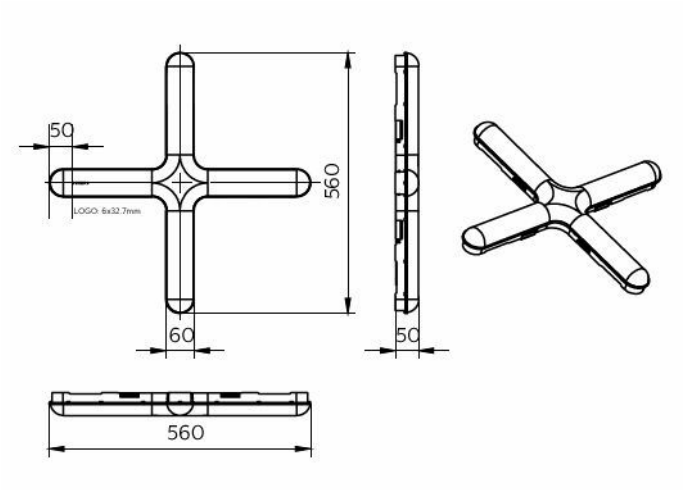

Related Documents

Photometry and lighting design	Document Name	Download
IES File	BN017C-LED30-840-2FT.ies	Download

© 2026 Signify Holding. All rights reserved. The information provided herein is subject to change, without notice. Signify does not give any representation or warranty as to the accuracy or completeness of the information included herein and shall not be liable for any action in reliance thereon. The information presented in this document is not intended as any commercial offer and does not form part of any quotation or contract, unless otherwise agreed by Signify. Philips and the Philips Shield Emblem are registered trademarks of Koninklijke Philips N.V.