PHILIPS

RS378B P42 940 PSU-E MB M102

911401721662



Greenspace Flex, 42 W, 940 neutral white, 24°, IP20 | Finger-protected

GreenSpace Flex is performance portfolio dedicated to Hospitality segment for GC/GM countries. With modular design concept, the light engines and different trims could have multiply of combination to satisfy diversified customer's requirement.

General Information

Number of gear units	1 unit
Driver included	Yes
Light source engine type	LED
Value ladder	Performance
Warranty period	3 years

Light Technical

Luminous Flux	2,400 lm
Correlated Color Temperature (Nom)	4000 K
Luminous Efficacy (rated) (Nom)	73 lm/W
Color rendering index (CRI)	>90
Beam angle of light source	- degree(s)
Light source color	940 neutral white
Optic type	-
Luminaire light beam spread	24°

Operating and Electrical

Input Voltage	220-240 V
Line Frequency	50 or 60 Hz
Average CLO power consumption	3515 W
Power Consumption	42 W
Power Factor (Fraction)	0.9
Connection	External connector
Cable	-
Number of products on MCB of 16 A type B	-
Suitable for random switching	No
Protection class IEC	Safety class II

Controls and Dimming

Dimmable	No
Driver/power unit/transformer	Electronic transformer
Control interface	-
Constant light output	No
Maximum dim level	Not applicable

Mechanical and Housing

Housing Material	Aluminum Alloy
Reflector material	-
Optic material	Polymethyl methacrylate
Optical cover material	Polymethyl methacrylate
Fixation material	Aluminum
Housing Color	Grey
Optical cover finish	Opal
Overall height	116 mm
Overall diameter	102 mm
Ingress protection code	IP20 [Finger-protected]
Mech. impact protection code	IK04 [0.5 J standard plus]
Optical cover type	PMMA
Net Weight (Piece)	0.940 kg

Approval and Application

Glow-wire test	Temperature 600 °C, duration 30 s
Flammability mark	-
CE mark	Yes
ENEC mark	-
EU RoHS compliant	Yes
Ambient temperature range	-20 to +45 °C

Initial Performance (IEC Compliant)

Luminous flux tolerance	-10% / +10%
Initial chromaticity	SDCM<3
Power consumption tolerance	+/-10%

Over Time Performance (IEC Compliant)

Median useful life L80B50	50,000 hour(s)

Product Data

Order product name	RS378B P42 940 PSU-E MB M102
Full product name	RS378B P42 940 PSU-E MB M102
Full product code	911401721662
Order code	911401721662
Material Nr. (12NC)	911401721662
Numerator - Quantity Per Pack	1
Numerator - Packs per outer box	12

Dimensional drawing

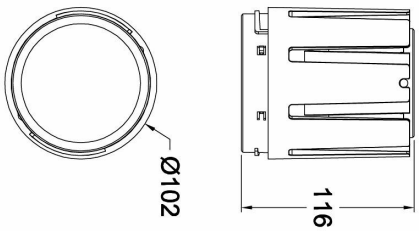

Modular Type	D, mm	H, mm
RS378B P6/P11 M55	55	49
RS378B P15 M55	55	49
RS378B P24 M70	70	90
RS378B P33 M87	87	107
RS378B P42 M102	102	116

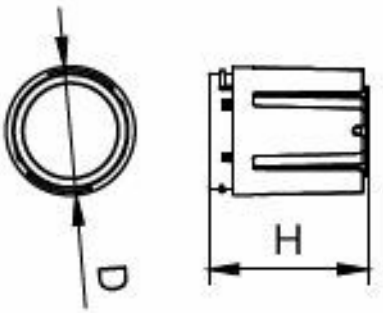

Related Documents

Documents and certificates	Document Name	Download
Installation Instructions	PHL_Greenspace_Flex_Modular-INI.pdf	Download
Installation Instructions	MI_GreenSpace_Flex_RS378.pdf	Download

© 2026 Signify Holding. All rights reserved. The information provided herein is subject to change, without notice. Signify does not give any representation or warranty as to the accuracy or completeness of the information included herein and shall not be liable for any action in reliance thereon. The information presented in this document is not intended as any commercial offer and does not form part of any quotation or contract, unless otherwise agreed by Signify. Philips and the Philips Shield Emblem are registered trademarks of Koninklijke Philips N.V.