PHILIPS

WT150C LED 20S 6500 PSU L120

919515813160



A reliable and professional lighting solution. Perfect Balance between cost & performance!

Whether for a new building or renovation of an existing space, customers want lighting solutions that provide quality of light and substantial energy and maintenance savings. The Essential SmartBright Waterproof is the highly efficient and reliable value for money IP65 LED lighting solution. The luminaire and its components are designed for both indoor and semi-outdoor application (anti-UV PC material housing and diffuser), it is an ideal lighting solution for warehouse, food industry, parking garages, car washers. Beyond that, Essential SmartBright batten comes with class B serviceability and provide reliable performance for 30K hrs.

Warnings and Safety

- Meant for use in Indoor Industrial environment only

General Information

Driver included	Yes
Light source engine type	LED
Warranty period	2 years

Light Technical

Luminous Flux	2,100 lm
Correlated Color Temperature (Nom)	6500 K
Luminous Efficacy (rated) (Nom)	130 lm/W
Color rendering index (CRI)	>80
Beam angle of light source	120 degree(s)
Light source color	865 cool daylight

Optic type	Beam angle 120°
Luminaire light beam spread	120°

Operating and Electrical

Input Voltage	140-270 V
Line Frequency	50 Hz
Power Consumption	16 W
Power Factor (Fraction)	0.85
Protection class IEC	Safety class I
Surge Protection (Common/ Differential)	Surge protection level until 2.5 kV

Controls and Dimming

Dimmable	No
Control interface	-

Mechanical and Housing

Housing Material	Co-Extrusion Polycarbonate
Optic material	Polycarbonate
Optical cover material	Polycarbonate
Housing Color	White
Mounting device	Click Fix Mounting bracket (Surface & Suspended)
Material	Polycarbonate
Ingress protection code	IP65 [Dust penetration-protected, jet-proof]
Mech. impact protection code	IK08 [5 J vandal-protected]

Dimensional drawing

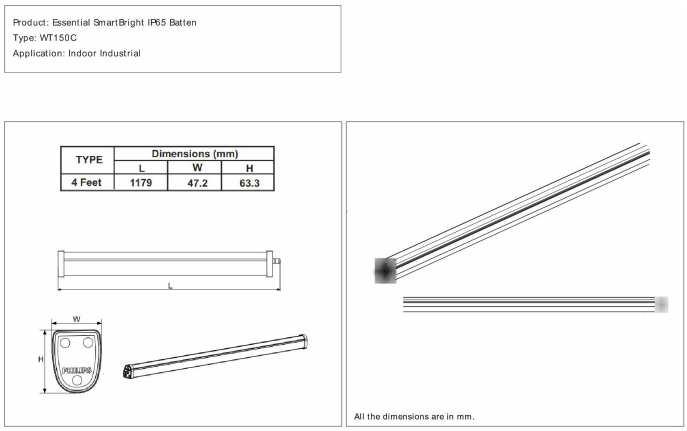

Optical cover type	Polycarbonate Diffuser
Net Weight (Piece)	0.600 kg

Approval and Application

Flammability mark	For mounting on normally flammable surfaces
Ambient temperature range	0 to +45 °C

Initial Performance (IEC Compliant)

Initial chromaticity	<5
Power consumption tolerance	+/-10%

Over Time Performance (IEC Compliant)

Median useful life L70B50	30,000 hour(s)

Product Data

Order product name	WT150C LED 20S 6500 PSU L120
Full product name	WT150C LED 20S 6500 PSU L120
Order code	919515813160
Material Nr. (12NC)	919515813160
Numerator - Quantity Per Pack	1
Numerator - Packs per outer box	9

Related Documents

Documents and certificates	Document Name	Download
Installation Instructions	Essential Smartbright _IP65 Batten-WT150C-INI.pdf	Download

Photometry and lighting design	Document Name	Download
IES File	Essential Smartbright-WT150C LED20S 6500 PSU L120.ies	Download

© 2026 Signify Holding. All rights reserved. The information provided herein is subject to change, without notice. Signify does not give any representation or warranty as to the accuracy or completeness of the information included herein and shall not be liable for any action in reliance thereon. The information presented in this document is not intended as any commercial offer and does not form part of any quotation or contract, unless otherwise agreed by Signify. Philips and the Philips Shield Emblem are registered trademarks of Koninklijke Philips N.V.