PHILIPS

TUV PL-S

XUTUPLS



TUV PL-S - Compact solution for residential applications

TUV PL-S lamps are compact UV-C 254 nm lamps. The compact size of the lamp allows for a small system design and design flexibility. TUV PL-S lamps offer almost constant UV output over their complete lifetime. Thanks to the single-ended lamp base, lamp replacement is easy.

Benefits

- Controlled UV-C output over lifetime of the lamp
- High system efficacy
- Good environmental choice because of lowest amount of mercury

Applications

- Residential drinking water units
- Pond water units
- Air treatment units
- Stand-alone air handlers

Features

- Short-wave UV radiation with a peak at 253.7 nm (UVC)
- Protective inside coating ensures constant UV output over the complete lifetime of the lamp
- Lamp glass filters out the 185 nm ozone-forming radiation
- 2-Pin PL-S lamp base contains a special starter for almost instant starting on electromagnetic drivers
- 4-Pin PL-S lamps are designed for use on electronic drivers
- Warning sign on lamp indicates that the lamp radiates UVC

- A lamp breaking is extremely unlikely to have any impact on your health. If a lamp breaks, ventilate the room for 30 minutes and remove the parts, preferably with gloves. Put them in a sealed plastic bag and take it to your local waste facilities for recycling. Do not use a vacuum cleaner.
- DANGER: Risk Group 3 Ultra Violet product. These lamps emit high-power UV radiation that can cause severe injury to skin and eyes. Avoid eye and skin exposure to unshielded product. Use only in an enclosed environment which shields users from the radiation.
- Plants and/or materials that are exposed to UV-C and/or ozone for a long time may become damaged and/or discolored.

Versions



XPPR XUTUVPLS G23



XPPR XUTUVPLS GX23



046677582876-929003296403
-LED_SuperSlim-CL-22W-
WHI-83Dim-120V-MIP.tif

Dimensional drawing

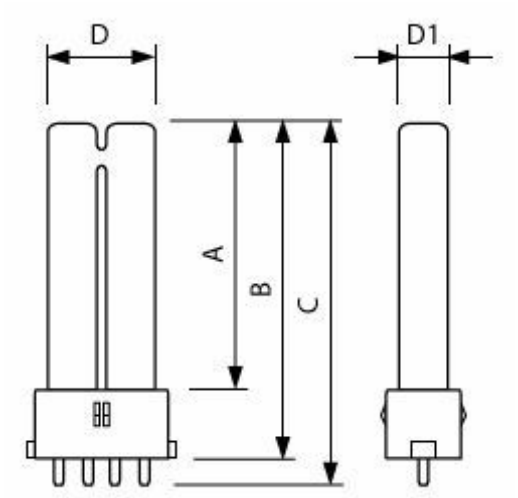

Product	D (max)	A (max)	B (max)	C (max)	
TUV PL-S 11W/4P 1CT/6X10CC	28 mm	195.5 mm	212.5 mm	218.9 mm	
TUV PL-S 40W/4P	-	28 mm	197.3 mm	213.3 mm	219.9 mm
TUV PL-S 5W/4P 1CT/5X10CC	13 mm	28 mm	65.2 mm	82.5 mm	89.1 mm
TUV PL-S 7W/4P 1CT/5X10CC	28 mm	94.7 mm	111.7 mm	118.1 mm	
TUV PL-S 9W/4P	13 mm	28 mm	127.2 mm	144.5 mm	151.1 mm

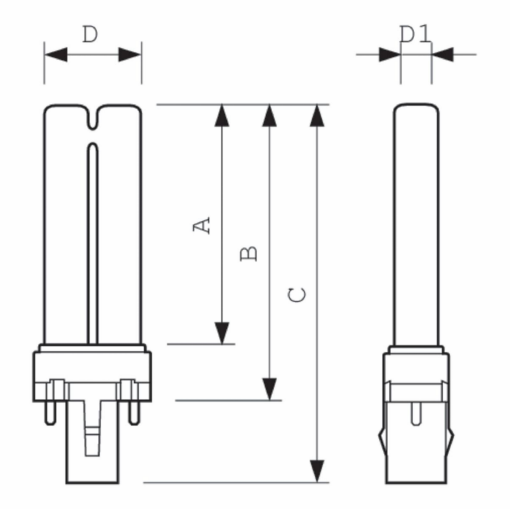

Product	D1 (max)	D (max)	A (max)	B (max)	C (max)
TUV PL-S 11W/2P 1CT/6X10BOX	13 mm	28 mm	198 mm	213.3 mm	236.3 mm
TUV PL-S 5W/2P 1CT/6X10BOX	13 mm	28 mm	67 mm	83 mm	105 mm
TUV PL-S 7W/2P 1CT/5X10CC	13 mm	28 mm	97 mm	112.5 mm	135.5 mm
TUV PL-S 9W/2P 1CT/6X10BOX	13 mm	28 mm	129 mm	144.5 mm	167 mm

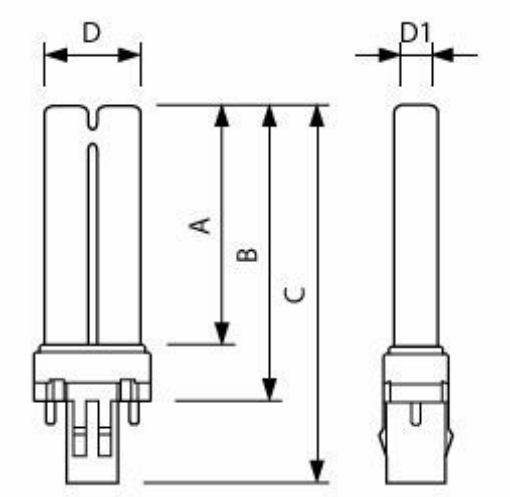

Product	D1 (max)	D (max)	A (max)	B (max)	C (max)
TUV PL-S 13W/2P 1CT/6X10BOX	13 mm	28 mm	139.5 mm	155.2 mm	178.2 mm

Light Technical

Color Code	TUV
Color Designation	- [Not Specified]

Mechanical and Housing

Bulb Shape	2XT12

Approval and Application

Mercury (Hg) Content (Nom)	3.0 mg

General Information

Order Code	Full Product Name	Cap-Base
927900504007	TUV PL-S 5W/2P 1CT/6X10BOX	G23

Order Code	Full Product Name	Cap-Base
927901104007	TUV PL-S 7W/2P 1CT/5X10CC	G23
927901704007	TUV PL-S 9W/2P 1CT/6X10BOX	G23
927902304007	TUV PL-S 11W/2P 1CT/6X10BOX	G23
927902804007	TUV PL-S 13W/2P 1CT/6X10BOX	GX23
927900804007	TUV PL-S 5W/4P 1CT/5X10CC	2G7
927901504007	TUV PL-S 7W/4P 1CT/5X10CC	-
927901904007	TUV PL-S 9W/4P	2G7
927902404007	TUV PL-S 11W/4P 1CT/6X10CC	-
927913304007	TUV PL-S 40W/4P	2G7

Operating and Electrical

Order Code	Full Product Name	Power Consumption	Lamp Current (Nom)
927900504007	TUV PL-S 5W/2P 1CT/6X10BOX	5.5 W	0.18 A
927901104007	TUV PL-S 7W/2P 1CT/5X10CC	7.1 W	0.175 A
927901704007	TUV PL-S 9W/2P 1CT/6X10BOX	8.6 W	0.17 A
927902304007	TUV PL-S 11W/2P 1CT/6X10BOX	11.6 W	0.16 A
927902804007	TUV PL-S 13W/2P 1CT/6X10BOX	13.0 W	0.29 A
927900804007	TUV PL-S 5W/4P 1CT/5X10CC	5.1 W	0.19 A
927901504007	TUV PL-S 7W/4P 1CT/5X10CC	7 W	0.19 A
927901904007	TUV PL-S 9W/4P	8.6 W	0.17 A
927902404007	TUV PL-S 11W/4P 1CT/6X10CC	11.3 W	0.15 A
927913304007	TUV PL-S 40W/4P	37.0 W	0.465 mA

© 2026 Signify Holding. All rights reserved. The information provided herein is subject to change, without notice. Signify does not give any representation or warranty as to the accuracy or completeness of the information included herein and shall not be liable for any action in reliance thereon. The information presented in this document is not intended as any commercial offer and does not form part of any quotation or contract, unless otherwise agreed by Signify. Philips and the Philips Shield Emblem are registered trademarks of Koninklijke Philips N.V.