PHILIPS

HF-Selectalume II for TL-D lamps

HFSIITLD



Most reliable standard, energy-efficient solution

HF-Selectalume II TL-D is the most cost-effective, reliable and outstanding solution for fluorescent lamps. These ballasts are part of an overall high-efficiency lighting system that may help you or your customers to achieve any international or local energy code you need to comply with. HF-Selectalume II TL-D ballasts are the ideal choice for a broad range of new construction and retrofit applications within the commercial sector, including general surface mounting or office lighting, parking garages, warehouses, waterproof and other applications. The ballast is primarily designed for Indoor application. For outdoor application, the luminaire should be minimum Classland need to be sufficiently protected against water & dust. The installation should also be guard against any lightening surge or any other necessary electrical protection as deemed in such typical installation & application.

Benefits

- Exceptional energy efficiency with striation-reduction technology in lighting systems at lower temperatures
- Maximum reliability in system operation
- Provides extended lamp life in frequent-switching applications

Applications

- Suitable for DC operation and emergency lighting installations; full compliance with requirements for emergency lighting according to EN 61347-2-3 -annex J
- For applications with high switching activity, e.g. where movement-detection control devices are used
- For luminaires of protection class I and protection class II used in office buildings, hospitals, supermarkets, department stores, industrial premises and schools

Features

- Highest CELMA Energy Efficiency Index A2 BAT*
- Complies with CE, ENEC, EL, VDE-EMC, CCC marks of conformity
- Average nominal service lifetime over 85,000 hours (at Ta 50°C) with a failure rate ≤ 0.1 % per 1,000 hours)
- Optimized lamp preheating for min 50,000 On/Off switch operations without replacement of lamps

Versions



GPPR_HFSIITL5_0005-Product photo

Dimensional drawing

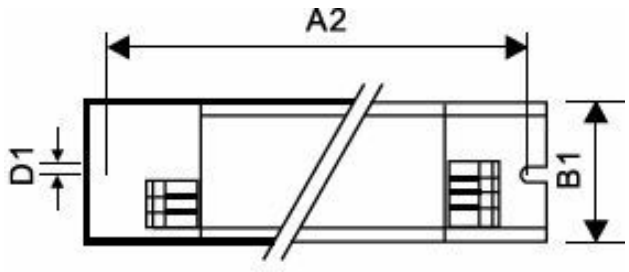

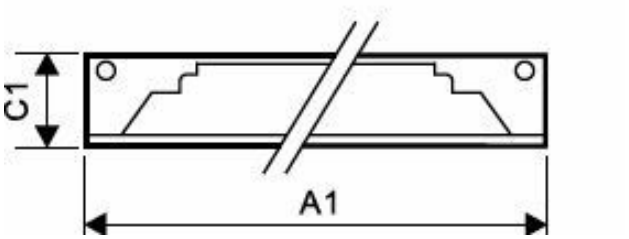

Product
HF-S 118/136 TL-D II 220-240V 50/60Hz
HF-S 158 TL-D II 220-240V 50/60Hz
HF-S 218/236 TL-D II 220-240V 50/60Hz
HF-S 3/4 18 TL-D II 220-240V 50/60Hz

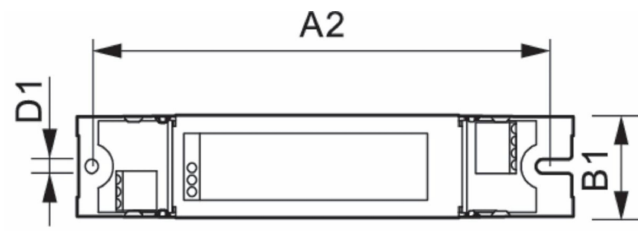

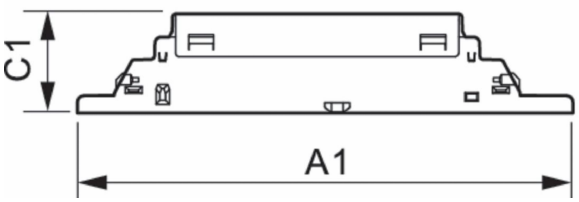

Product	D1	C1	A1	A2	B1
HF-S 258 TL-D II 220-240V 50/60Hz	4.1 mm	28.0 mm	280.0 mm	265.0 mm	30.0 mm

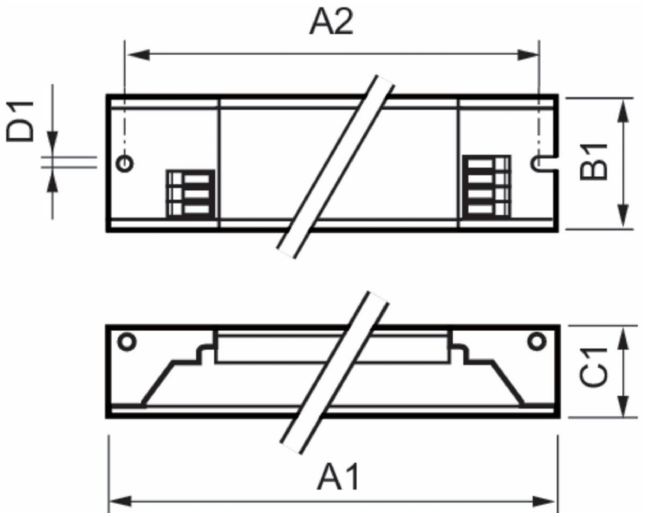

Product	A1	B1	C1	A2	B2	D1
HF-S 118/136 TL-D II 220-240V 50/60Hz	280 mm	30 mm	28 mm	265 mm	-	4.2 mm
HF-S 158 TL-D II 220-240V 50/60Hz	280 mm	30 mm	28.5 mm	265 mm	-	4.2 mm
HF-S 218/236 TL-D II 220-240V 50/60Hz	280 mm	30 mm	28 mm	265 mm	-	4.2 mm
HF-S 3/4 18 TL-D II 220-240V 50/60Hz	280 mm	39 mm	28 mm	265 mm	-	4.2 mm

Operating and Electrical

Input Voltage	220 to 240 V
Line Frequency	50 to 60 Hz
Input Frequency	50 to 60 Hz

Operating and Electrical

Order Code	Full Product Name	Number of Products on MCB (16A Type B) (Nom)
913713032166	HF-S 118/136 TL-D II 220-240V 50/60Hz	28
913713032266	HF-S 158 TL-D II 220-240V 50/60Hz	28
913713032466	HF-S 218/236 TL-D II 220-240V 50/60Hz	28
913713032566	HF-S 258 TL-D II 220-240V 50/60Hz	12
913713032666	HF-S 3/4 18 TL-D II 220-240V 50/60Hz	28

Mechanical and Housing

Order Code	Full Product Name	Housing
913713032166	HF-S 118/136 TL-D II 220-240V 50/60Hz	L 280x30x28
913713032266	HF-S 158 TL-D II 220-240V 50/60Hz	L 280x30x28
913713032466	HF-S 218/236 TL-D II 220-240V 50/60Hz	L 280x30x28
913713032566	HF-S 258 TL-D II 220-240V 50/60Hz	L 280x30x28
913713032666	HF-S 3/4 18 TL-D II 220-240V 50/60Hz	L 280x39x28

Approval and Application

Order Code	Full Product Name	Energy Efficiency Index
913713032166	HF-S 118/136 TL-D II 220-240V 50/60Hz	A2 BAT
913713032266	HF-S 158 TL-D II 220-240V 50/60Hz	A2 BAT
913713032466	HF-S 218/236 TL-D II 220-240V 50/60Hz	A2 BAT
913713032566	HF-S 258 TL-D II 220-240V 50/60Hz	A2 BAT
913713032666	HF-S 3/4 18 TL-D II 220-240V 50/60Hz	A2/A2 BAT

© 2026 Signify Holding. All rights reserved. The information provided herein is subject to change, without notice. Signify does not give any representation or warranty as to the accuracy or completeness of the information included herein and shall not be liable for any action in reliance thereon. The information presented in this document is not intended as any commercial offer and does not form part of any quotation or contract, unless otherwise agreed by Signify. Philips and the Philips Shield Emblem are registered trademarks of Koninklijke Philips N.V.